ESOG150-PCAxx Series PowerGen7500 DC Genset

User Manual

Smarter. Greener. Together.

Table of contents

1 General 4

1.1 Use The Manual 4

1.2 Safety Notice 4

1.2.1 About legal and safety information 4

1.2.2 Legal statements 4

1.3 Safety Instructions 6

1.3.1 General instructions 6

1.3.2 Specific instructions 10

2 Overview 12

2.1 Order Information 12

2.1.1 Optional Parts 13

2.2 Cabinet Mounting 13

2.2.1 Cabinet Dimension 13

2.2.2 Mount Surface 14

2.2.3 Mount Spacing 16

2.3 System Architecture 16

2.3.1 Overview 16

2.3.2 Fuel Control 18

2.3.3 Engine Parts 18

2.3.4 Control Part 19

2.3.5 Wire Access 21

2.3.6 FG 21

2.3.7 Block Diagram 22

2.3.8 Cable Requirement 22

3 Installation Process 25

3.1 Site Preparation 25

3.1.1 Site Selection 25

3.1.2 Installation Pad 26

3.1.3 Propane Tank 26

3.1.4 Natural Gas Meter 26

3.1.5 Grounding Requirements 26

3.2 Unpack Cabinet 27

3.3 Mount Genset 28

3.4 Fuel Hook-up 29

3.4.1 Fuel Hook-up: Propane Tank 29

3.4.2 Fuel Hook-up: Natural Gas Utility 30

3.4.3 Fuel Selection: LP Propane or NG Natural Gas 31

3.5 DC Output Connections and Alarm Connections 31

3.6 Engine Oil 32

3.7 Extender Tank Oil 33

3.8 External Chassis Ground Connection *33*

3.9 Start Battery Installation (optional) *34*

3.10 Signal Connections *36*
3.10.1 Alarm Relay Connection 36
3.10.2 Remote Disconnect Connection 38

3.11 WEB Access *38*

3.12 Password and Network Setup *39*

3.13 Commissioning *40*
3.13.1 No Fuel Crank Test 40
3.13.2 Initial Start-up Test 41

3.14 Check List *42*

4 Operation 43

4.1 Operating Modes *43*
4.1.1 Auto-Mode 43
4.1.2 Run-Manual-Mode 44
4.1.3 Stop-Manual-Mode with Cool Down 44
4.1.4 Stop-Manual-Mode No Cool Down 44
4.1.5 Automatic Exercise 44
4.1.6 No Fuel Warning 45

4.2 System Specification *45*
4.2.1 DC Genset Specifications 45
4.2.2 Engine Specifications 46
4.2.3 Fuel Supply Specifications 46

4.3 Interface *47*
4.3.1 Buttons 47
4.3.2 Status LED 49
4.3.3 Alarm LED 50
4.3.4 RUN Status Relay 51
4.3.5 Alarm Relays 52
4.3.6 Remote Disable 52
4.3.7 WEB Access 53

4.4 Alarm Events *55*
4.4.1 Pre-Start Fail 56
4.4.2 Engine Start Fail 56
4.4.3 Engine Stop Fail 56
4.4.4 Motor LV 56
4.4.5 Converter Fail 56
4.4.6 HV Alarm 56
4.4.7 OVP Alarm 57
4.4.8 LV Alarm 57
4.4.9 LVP Alarm 57
4.4.10 Pre-HT Alarm 57
4.4.11 HT Alarm 57
4.4.12 HS Alarm 58
4.4.13 OSP Alarm 58
4.4.14 LS Alarm 58

4.4.15 LSP Alarm 58
4.4.16 Oil Low Pressure 58
4.4.17 Oil Leakage 58
4.4.18 Loss Oil Sensor 59
4.4.19 Door Open 59
4.4.20 Gas Leakage 59
4.4.21 Pad Shear Alarm (optional) 59
4.4.22 Water Intrusion Sensor (optional) 59
4.4.23 Pre-Low Fuel 60
4.4.24 Low Fuel (optional) 60
4.4.25 DC SPD Fault 60
4.4.26 Internal Battery LV 60
4.4.27 Manual Over Time 60
4.4.28 100H Maintain 60
4.4.29 500H Maintain 61
4.4.30 50H Maintain 61
4.4.31 Remote Disable 61
4.4.32 Oil Pump Fuse Fail 61
4.4.33 Overload 61

4.5 Environment 62
4.5.1 Environmental Specifications 62
4.5.2 Safety Specification 62

5 Maintenance 63

5.1 Maintenance 63
5.1.1 Routine Maintenance 63
5.1.2 Checking/Adding Engine Oil 63
5.1.3 50 Run-hours Maintenance 64
5.1.4 100 Run-hours Maintenance 65
5.1.5 500 Run-hours Maintenance 65
5.1.6 Changing Engine Oil and Oil Filter 65
5.1.7 Service Air Cleaner 66
5.1.8 Service Spark Plugs 67

5.2 Warranty 67

5.3 Recycling 67

5.4 Spare Parts 68

6 Troubleshooting 69

7 Version & Glossary 71

7.1 Change History 71

7.2 Glossary 71

1 General

1.1 Use The Manual

SAVE THESE INSTRUCTIONS – This manual contains important instructions for Models ESOG150-PCAxx series that should be followed during installation and maintenance of the generator and batteries. If you have any question or doubt about the product, please contact Delta Greentech via below windows.

Delta Greentech, USA
2360 Campbell Creek Blvd. Ste 530
Richardson, TX 75082
1-877-DELTA-08 option 3 for Technical Support
DGA.Support@delta-corp.com
HTTP://www.deltapowersolutions.com

1.2 Safety Notice

1.2.1 About legal and safety information

Please read all safety and legal information given here before working with any Delta products. Ignoring these instructions may result in damage to the equipment, health hazards, or loss of life.

These safety instructions are an extension of any national laws governing health and safety at work and the applicable standards, as well as any regulations of the statutory authorities.

Installation shall only be performed by trained persons familiar with the local installation regulations. The local installation regulations must always be followed (covering installation in the building and main AC distribution panels). It is also necessary to follow the instructions provided in the system user manual for installation, commissioning, operation, and maintenance.

1.2.2 Legal statements

1.2.2.1 Statement of compliance

Please see the relevant product fact sheet for information.

1.2.2.2 Limitations

The equipment is mainly intended for telecommunications purposes only. The equipment is not intended for use in applications in which the failure of the equipment could lead to death, person injury, or severe physical or environmental damage.

Delta is not responsible for any danger or damage resulting from incorrect installation, maintenance, operation or usage of the equipment, use beyond its intended purpose, failure to observe state instructions, and/or failure to observe the applicable safety regulations.

Delta is only responsible for components and services provided by Delta. Third party components and/or services, such as batteries, repair and/or maintenance used in and/or conducted for the equipment are not the responsibility of Delta. Furthermore, Delta is not responsible for any malfunction or danger of, and/or damage to/resulted from the equipment caused by such third party components and/or services.

Unauthorized modifications to the equipment may result in incorrect operation and/or performance. The operator is responsible for the consequences of any modification in the hardware configuration that are made without an agreement with the manufacturer or authorized representative.

Installation, operation and maintenance of the equipment should only be performed by suitably qualified personnel with appropriate training. The operator is responsible for ensuring that personnel working with the equipment are provided with appropriate operation and safety training.

The operator is responsible for ensuring that location of the system is treated as an electrical equipment room. These rooms must have appropriate air-conditioning and restricted access. The operator is also responsible for ensuring that the system rack doors are securely locked and not accessible to unauthorized persons.

If the power supply to the system is not fitted with a disconnecting switch or equivalent device, the operator is responsible for fitting an appropriate disconnection switch conforming to the relevant regulations.

1.2.2.3 Third Party Devices

Delta is not responsible for devices, such as batteries that are not supplied by Delta.

Delta is not responsible for any danger or damage resulting from devices not supplied by Delta.

1.3 Safety Instructions

Warnings, cautions, and notes are used to identify important information. They are classified as follows:

Warning! A warning means that injury or death is possible if the information or instructions are not obeyed.

Danger! A Danger means that injury or death for high temperature or moving parts if the information or instructions are not obeyed.

Caution! A caution means that damage to equipment is possible if the information or instructions are not obeyed.

Note! Notes are additional information which may be useful to the operator.

1.3.1 General instructions

Warning! Servicing: Failure to read and follow Installation and Operator's manuals before installing and operating the generator system could result in death or serious injury. This genset must be serviced only by authorized personnel. Enclosure must remain locked when service personnel are not present. Remove all conductive jewellery or personal equipment prior to servicing equipment, parts, connectors, wiring, or batteries. For Standby Service connect output of generator to Telecom Power System DC Bus.

Warning! Fire Hazard: This enclosure is intended for installation with 18" clearance from combustible construction to comply with NFPA 37 Article 4.1.4 condition 2 for clearance from combustible construction.

Warning! Fire Hazard: Exhaust heat/gasses could ignite combustibles or structure resulting in death or serious injury. Exhaust Outlet Side of weather-proof enclosure must have at least 5ft (1.5M) min clearance from any structures, shrubs, trees, or any kind of vegetation.

Warning! Fire Hazard: Operation of this equipment may create sparks that can start fires around dry vegetation. A spark arrestor may be required. The operator should contact local fire agencies for laws or regulations relating to fire prevention requirements.

Danger! Burn Hazard: Hot surfaces could cause burns resulting in death or serious injury. Do not touch hot surfaces and avoid hot exhaust gases. Localized areas of high temperature (<70 °C) may occur on the genset enclosure surface. Take precautions against accidental burns.

Danger! Start Without Notice Hazard: Engine could start at any time without notice which could result in death or serious injury. Turn off main breaker and battery breaker in control panel prior to servicing.

Warning! Poison Gas Hazard: Engine exhaust contains carbon monoxide a poisonous gas that could kill you in minutes. You CANNOT smell it or see it. Operate ONLY outside far from windows, doors, and vents. Install carbon monoxide alarms. DO NOT run in partially enclosed spaces. Point engine exhaust away from occupied spaces.

Warning! Poison Gas Hazard: NFPA 37 does not address Carbon Monoxide (CO) hazards. To avoid CO hazards refer to the installation manual for proper placement and CO detector requirements.

Warning! Batteries: Never use un-insulated tools or other conductive materials when installing, maintaining, servicing or replacing batteries. Use special caution when connecting or adjusting battery cabling.

Warning! Batteries: An improperly connected battery cable, or unconnected battery cable, can result in arcing, fire, or possible explosion. Batteries contain dangerous voltages, currents and corrosive material. Battery installation, maintenance, service and replacement must be performed by authorized personnel only.

Warning! Batteries: A battery that shows signs of cracking, leaking or swelling must be replaced by authorized personnel immediately using a battery of identical type and rating.

Warning! Batteries: Avoid any contact with gelled or liquid emissions from a valve-regulated lead-acid (VRLA) battery. Emissions contain dilute sulfuric acid that is harmful to the skin and eyes. Emissions are electrolytic, and are electrically conductive and are corrosive. Follow the Chemical Hazards notes if contact occurs.

Warning! Batteries: Do not smoke or introduce sparks in the vicinity of the batteries or natural gas/propane connections. Under certain overcharging conditions, lead-acid batteries can vent a mixture of hydrogen gas that is explosive. Proper venting of the enclosure is required.

Warning! Batteries: Follow the battery manufacturer's approved transportation and storage instructions. There is the risk of electrical shock from the main power supply and/or batteries.

Warning! Electric Shock: Hazardous voltages are present within the equipment when a source of electrical power is applied. There is the risk of electrical shock from the main power supply and/or batteries.

Warning! Electric Shock: When working on equipment with power applied, supervision of personnel is required. The supervisor must be capable of providing first aid in the event of electrical shock. Provision of an emergency switch or disconnection strap is not sufficient protection.

Warning! Protective shields and other safety devices provided with the equipment must be in place when the equipment is operated.

Warning! Electric Shock: During installation and maintenance, protective shields may be temporarily removed. Use suitable insulated tools and appropriate clothing. Handle fuses only with tools provided for this purpose, for example, load-break switch handles. Adequate insulation from ground potential (earth) must be provided when working on the equipment.

Warning! Heavy Equipment: The weight of the equipment requires suitable safety considerations. Additional personnel or lifting equipment may be needed. Where required, the weight of equipment is stated on the front of the unit.

Warning! Running engine gives off carbon monoxide, an odourless, colourless, poison gas. Breathing carbon monoxide could result in death, serious injury, headache, fatigue, dizziness, vomiting, confusion, seizures, nausea or fainting.

Warning! Operate this product ONLY outdoors in an area that will not accumulate deadly exhaust gas.

Warning! Keep exhaust gas away from any windows, doors, ventilation intakes, soffit vents, crawl spaces, open garage doors or other openings that can allow exhaust gas to enter inside or be drawn into a potentially occupied building or structure.

Warning! Carbon monoxide detector(s) MUST be installed and maintained indoors according to the manufacturer's instructions / recommendations. Smoke alarms cannot detect carbon monoxide gas.

Warning! When the system is working, please to connect external battery to the system.

1.3.2 Specific instructions

Additional warnings, cautions, and notes specific to certain equipment and/or conditions are described in the context of relevant instructions

Please read all documentation relevant to the given task.

Where devices, such as batteries, that are not supplied by Delta are used, please read and observe all safety notices and instructions supplied by the appropriate manufacturer or supplier.

Warning! Please observe all warning labels and notification on the equipment.

Caution! Use only suitable measuring devices. Calibrate measuring devices regularly.

Note! Servicing of batteries are to be performed or supervised by personnel knowledgeable of batteries and the required precautions. Keep unauthorized personnel away from batteries.

Note! When replacing the battery, use the same battery identified in chapter 2.1. And keep the same number in series.

Caution! Do not dispose of battery or batteries in a fire. The battery is capable of exploding.

Caution! Do not open or mutilate the battery or batteries. Released electrolyte has been known to be harmful to the skin and eyes and to be toxic.

Caution! A battery presents a risk of electrical shock and high short circuit current. The following precautions are to be observed when working on batteries.

1) Remove watches, rings, or other metal objects,

2) Use tools with insulated handles,

3) Wear rubber gloves and boots,

4) Do not lay tools or metal parts on top of batteries,

5) Disconnect charging source prior to connecting or disconnecting battery terminals, and

6) Determine the battery is inadvertently grounded. When inadvertently grounded, remove source of ground.

Note! The installation of the engine generator shall provide enough ventilation to ensure that gases generated by vented batteries during charging, or caused by equipment malfunction are removed.

Note! Delta recommends using wire rated for 90°C or greater for all AC and DC connections.

Caution! The electrolyte is a dilute sulfuric acid that is harmful to the skin and eyes. It is electrically conductive and corrosive. The following procedures are to be observed:

1) Wear full eye protection and protective clothing,

2) Where electrolyte contacts the skin, wash it off immediately with water,

3) Where electrolyte contacts the eyes, flush thoroughly and immediately with water and seek medical attention, and

4) Spilled electrolyte is to be washed down with an acid neutralizing agent. A common practice is to use a solution of one pound (500 grams) bicarbonate of soda to one gallon (4 liters) of water. The bicarbonate of soda solution is to be added until the evidence of reaction (foaming) has ceased. The resulting liquid is to be flushed with water and the area dried.

Caution! Lead-acid batteries present a risk of fire because they generate hydrogen gas. The following procedures are to be followed:

1) DO NOT SMOKE when near batteries,

2) DO NOT cause flame or spark in battery area, and

3) Discharge static electricity from body before touching batteries by first touching a grounded metal surface.

2 Overview

This document describes the installation and maintenance practices for the Delta PowerGen 7500 DC Genset with part number ESOG150-PCA01.

PowerGen 7500 (ESOG150-PCAxx series) is DC Generator powered by Methane or Propane. This manual contains specifications and instructions to properly install, commissioning and maintain the PowerGen 7500. Component specifications, checklist and drawings are contained in this manual. The manual also includes DC Generator status, alarms, even log, energy record, maintenance interval and troubleshooting.

Step by step procedures required for installation and turn-up are detailed. All equipment parameter settings, adjustments and confirmation as well as system monitoring, operations and maintenance procedures are included.

Warnings are printed in bold lettering and alert the installation or maintenance craftsperson of a potential hazard to either or the craftsperson if the warning advisement is not followed.

2.1 Order Information

Product	Order P/N	Note
Outdoor Genset	ESOG150-PCA01	DC Genset with extender oil tank
Outdoor Genset	ESOG150-PCA02	DC Genset (no extender oil tank)
Air Cleaner	KUSS FILTRATION P/N: 871393	Spare Parts
Oil Filter	Mobil 1 P/N: M1-209	Spare Parts
Low Pressure Sensor	3799512100-S	Optional
Water Intrusion Sensor and Pad Shear Sensor	3799512300-S	Optional

DC SPD	0924801083	Spare Parts
2.5 Gal Oil (5W-30)	5100266100	Spare Parts
Battery - T91-0003-04	0999143908	Internal Start Battery (Optional)
Battery - T75-0002-04	0999143300	Internal Start Battery (Optional)
Battery - T05-0011-04	0999144708	Internal Start Battery (Optional)
Battery - PYL12V100FS	0999142400	Internal Start Battery (Optional)
Battery Heater kit	3799485900-S	Battery Heater Pad (Optional)
Extender Oil Tank	3799527900-S	Optional

2.1.1 Optional Parts

- Internal Start Battery: An internal 48V start battery string can be used to start the APU when energy from batteries in the attached Telecom site power system.

- Battery Heater Pad: An optional DC powered battery heater pad may be used to maintain the internal start battery temperature in cold environments. It is powered through a 10A single pole breaker. The heater pad will turn on at 5°C (40°F) and turn off at 15°C (60°F).

- Low Fuel Pressure Sensor: An optional Low Fuel Sensor may be used to sense that fuel in an attached LPG tank is depleted.

- Pad Shear and Water Intrusion Sensors: Optional sensors may be used to detect that the genset is non-operational due to a catastrophic event such as flood, earthquake, tornado, or vehicle impact. Pad Shear and Water Intrusion Sensors are providing as a common kit. An optional Pad Shear sensor may be used to detect that the genset has been displaced from the mounting pad by a catastrophic event such as earthquake, tornado, or vehicle impact. An optional Water Intrusion sensor may be used to detect that the genset has been flooded and must be inspected for damage.

- Extender Oil Tank: An optional Extender Oil Tank may be used to extend the maintain interval. PowerGen 7500 DC Genset support an optional Extender Oil Tank to do auto oil exchange. And it will exchange oil between engine and oil tank every two hours.

2.2 Cabinet Mounting

2.2.1 Cabinet Dimension

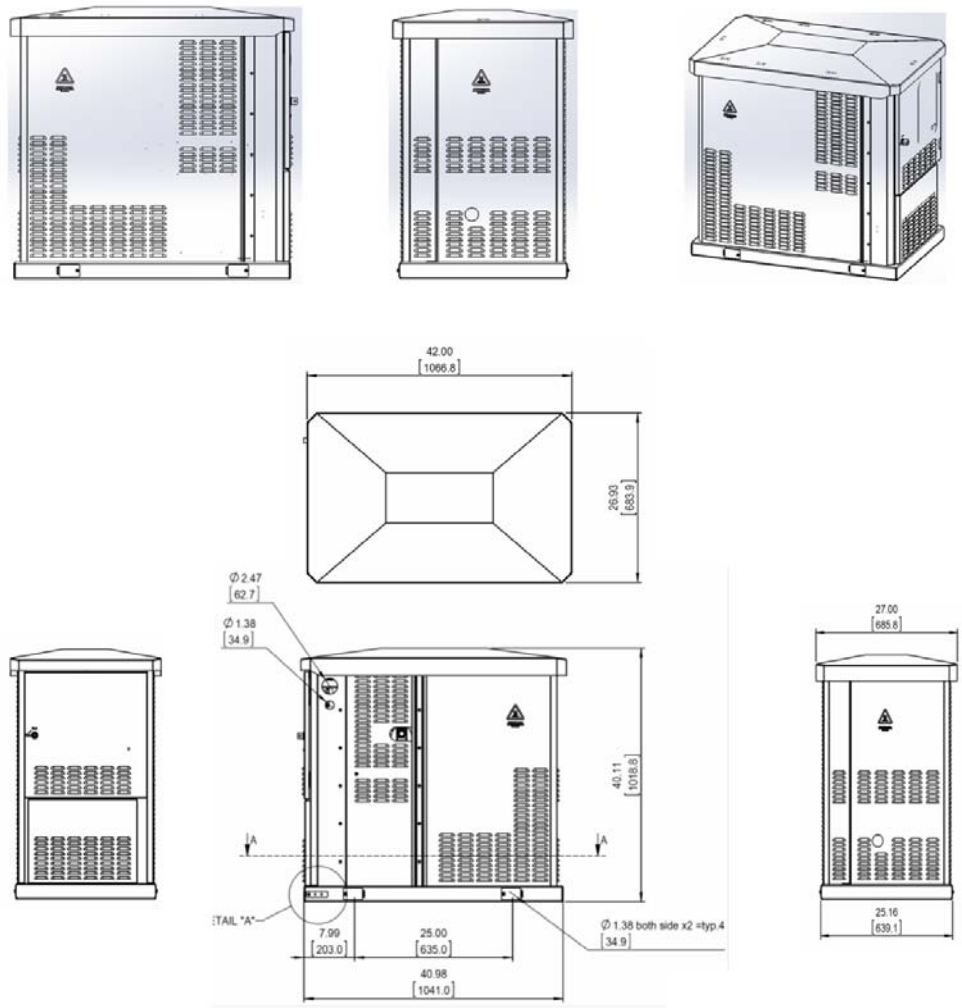

2.2.2 Mount Surface

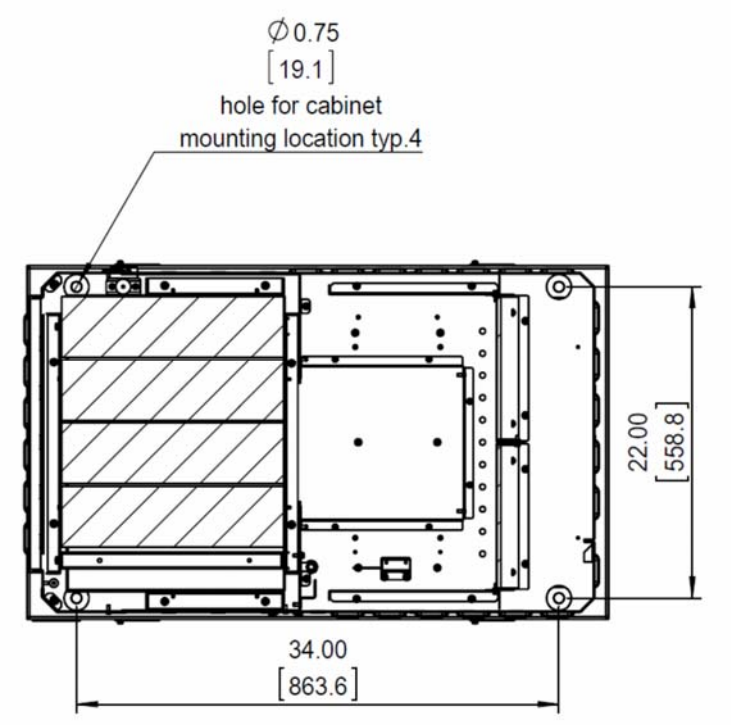
∅0.75
[19.1]
hole for cabinet
mounting location typ.4
22.00
[558.8]
34.00
[863.6]

2.2.3 Mount Spacing

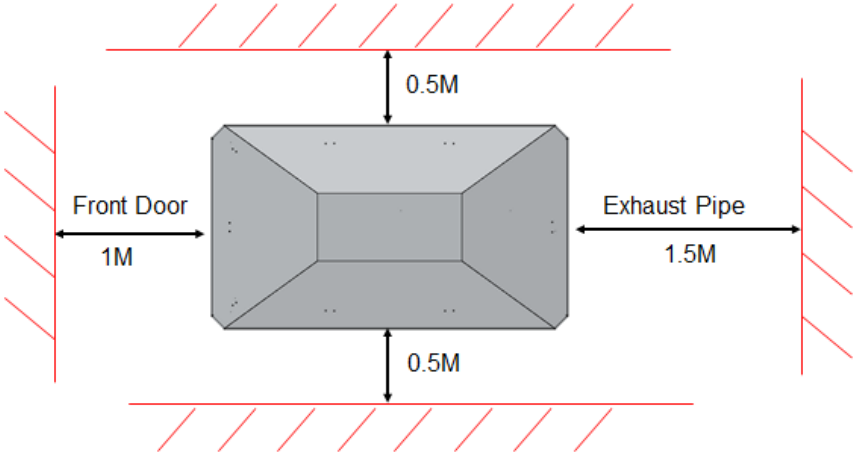

2.3 System Architecture

2.3.1 Overview

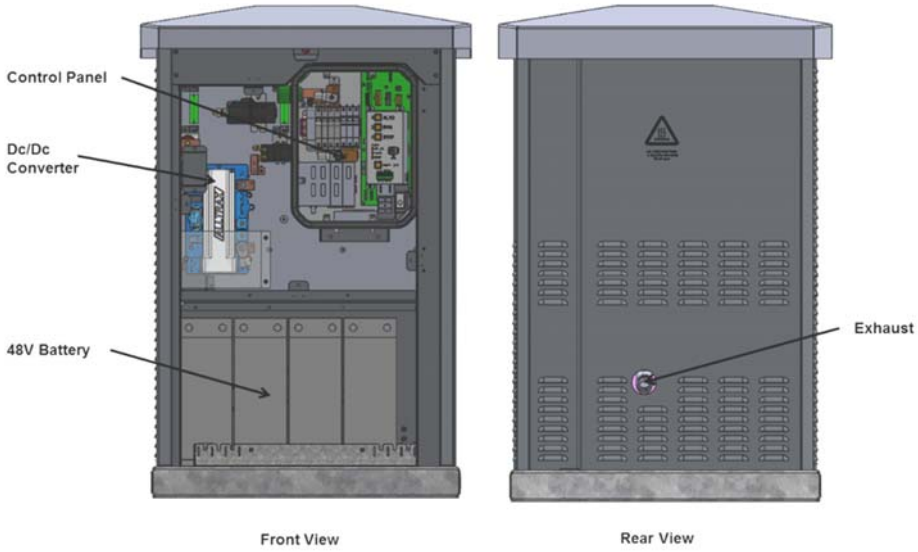

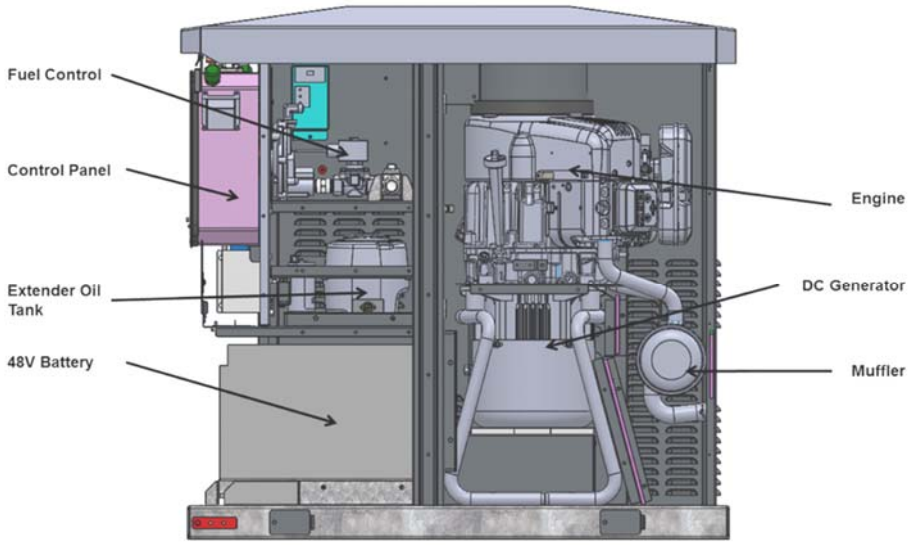

Side View

Note! 48V Battery is optional parts. Customer must follow chapter 2.1 to select the battery.

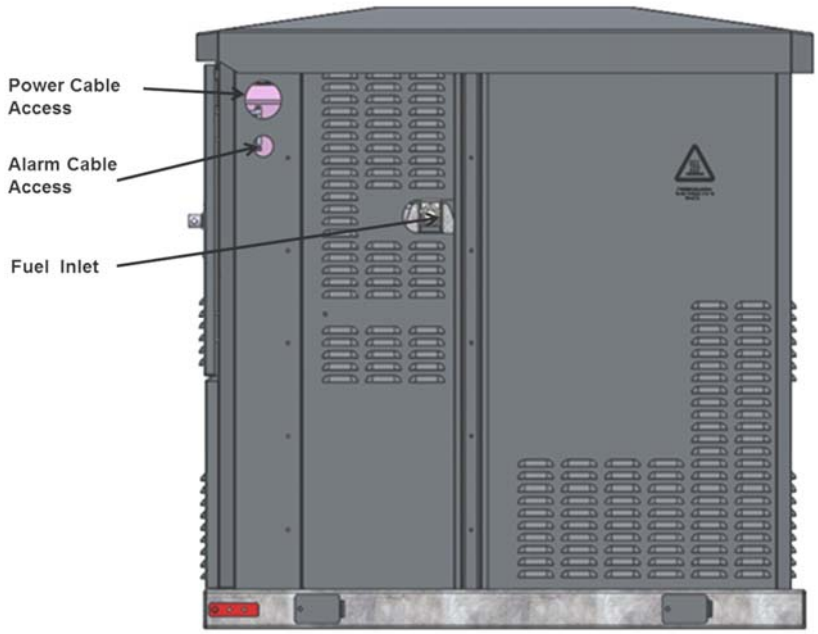

2.3.2 Fuel Control

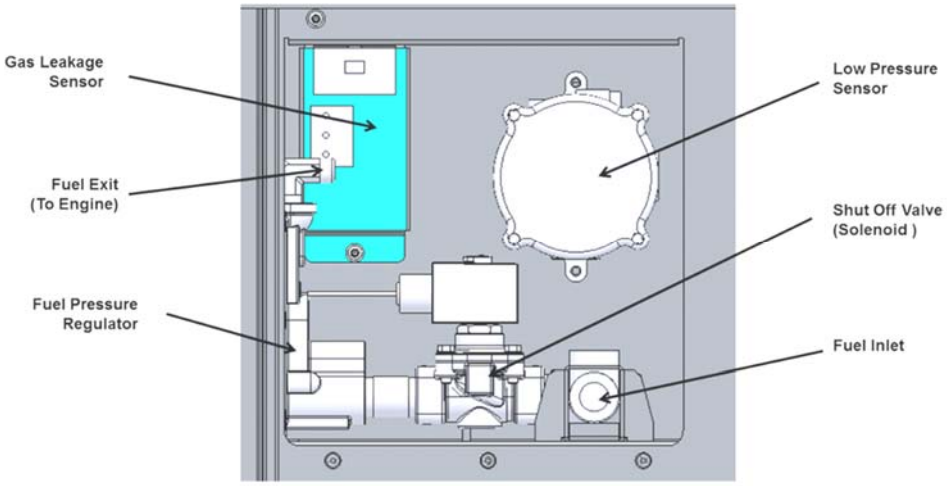

Note! Low Pressure Sensor is optional parts.

2.3.3 Engine Parts

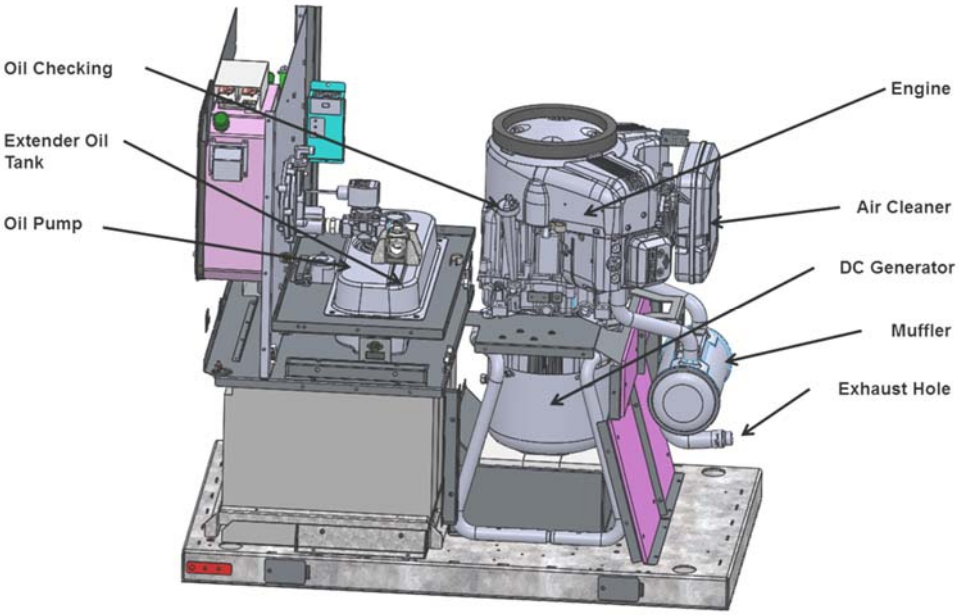

2.3.4 Control Part

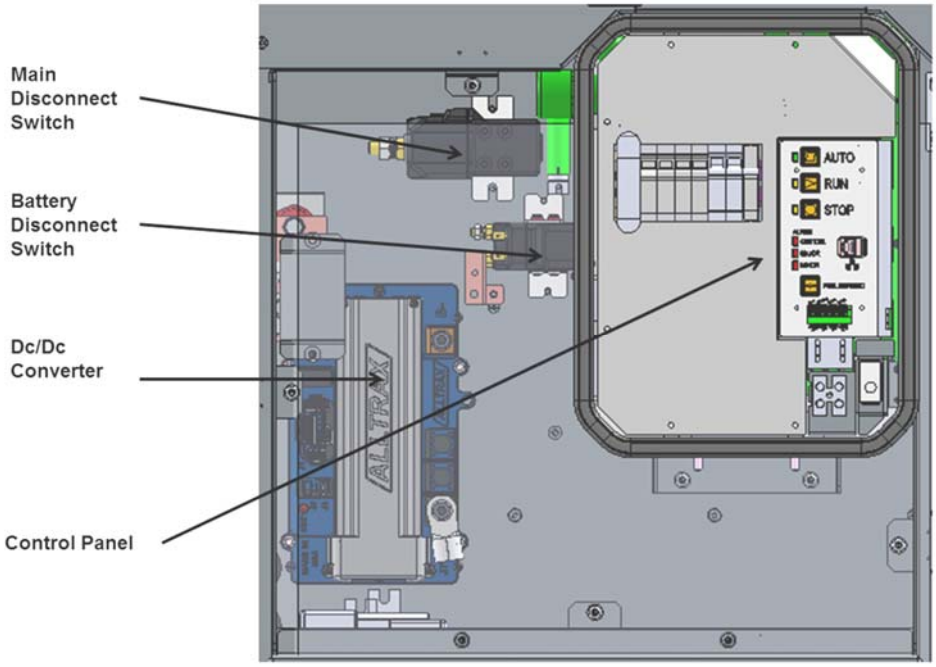

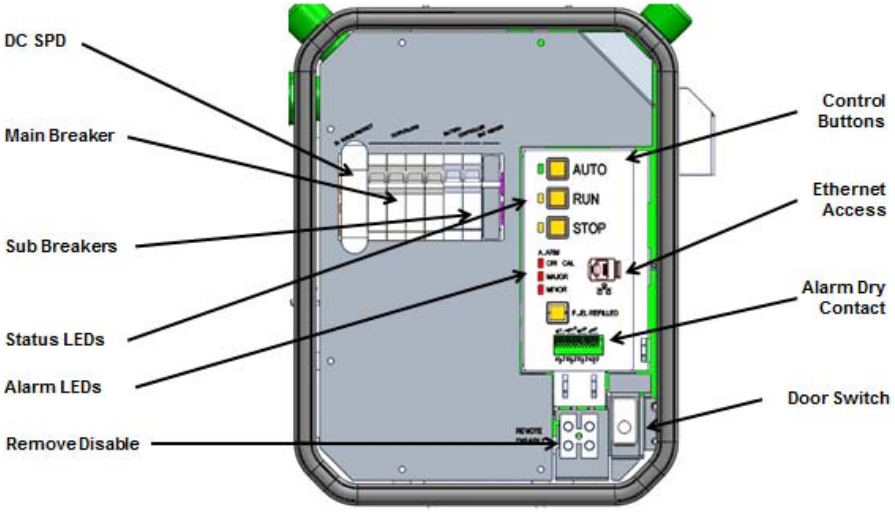

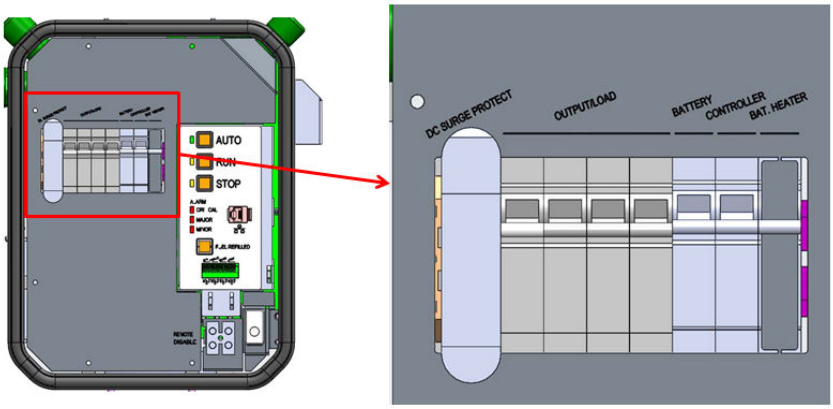
AUTO
RUN
STOP
DC SURGE PROTECT
OUTPUT/LOAD
BATTERY
CONTROLLER
BAT. HEATER

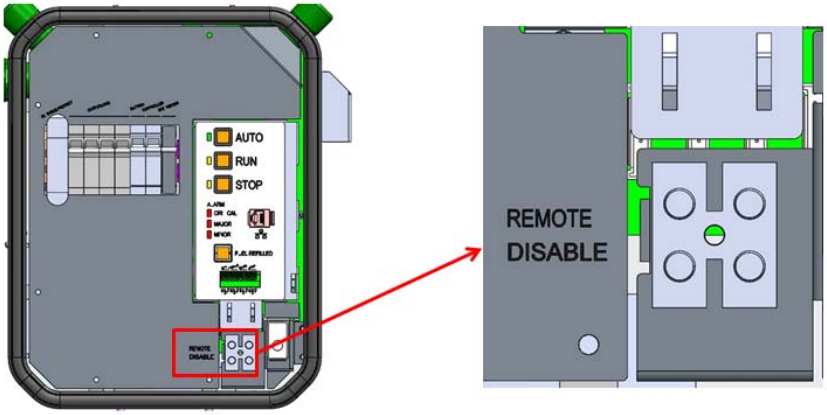
AUTO
RUN
STOP
REMOTE
DISABLE

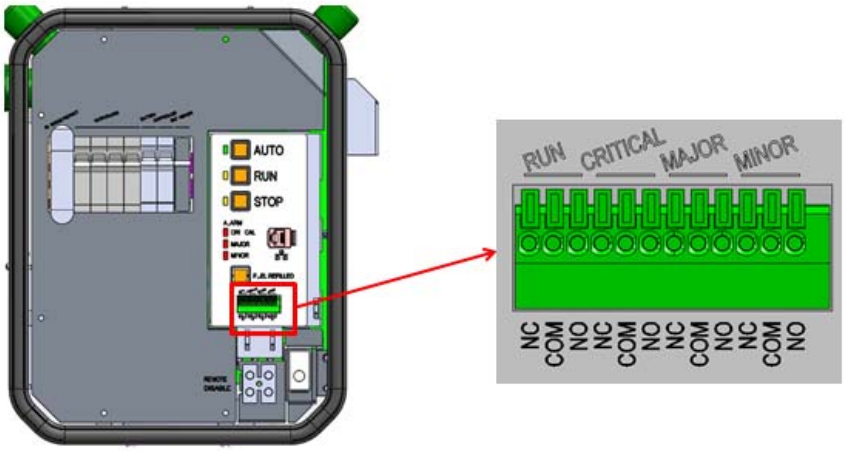
AUTO
RUN
STOP
RUN
CRITICAL
MAJOR
MINOR
NC
COM
NO
NC
COM
NO
NC
COM
NO
NC
COM
NO

2.3.5 Wire Access

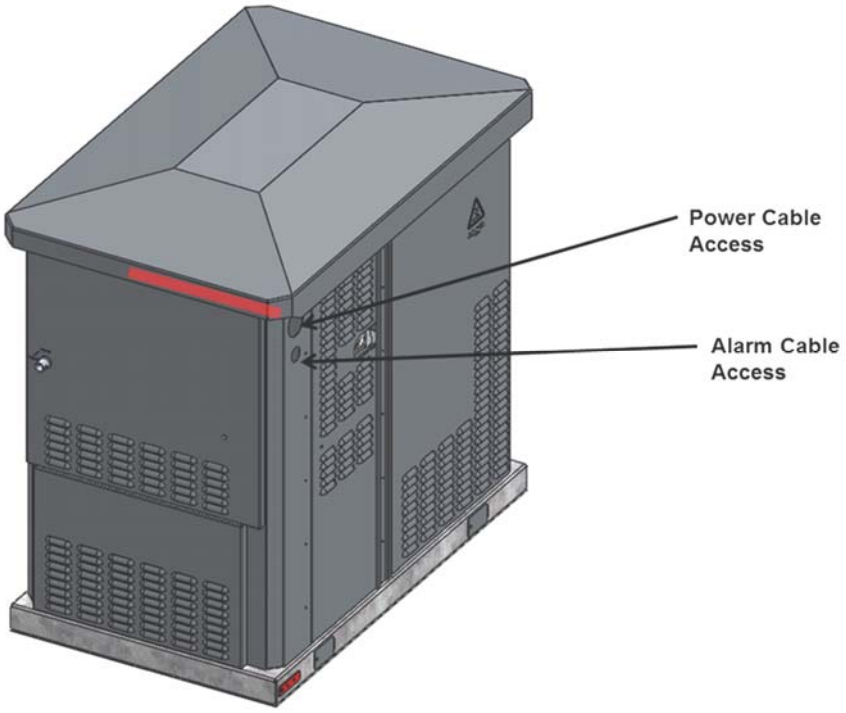

2.3.6 FG

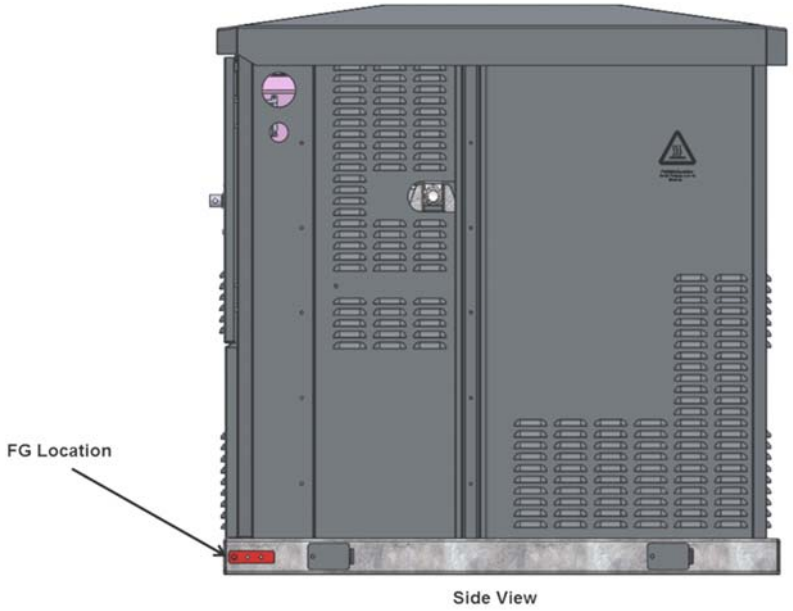

2.3.7 Block Diagram

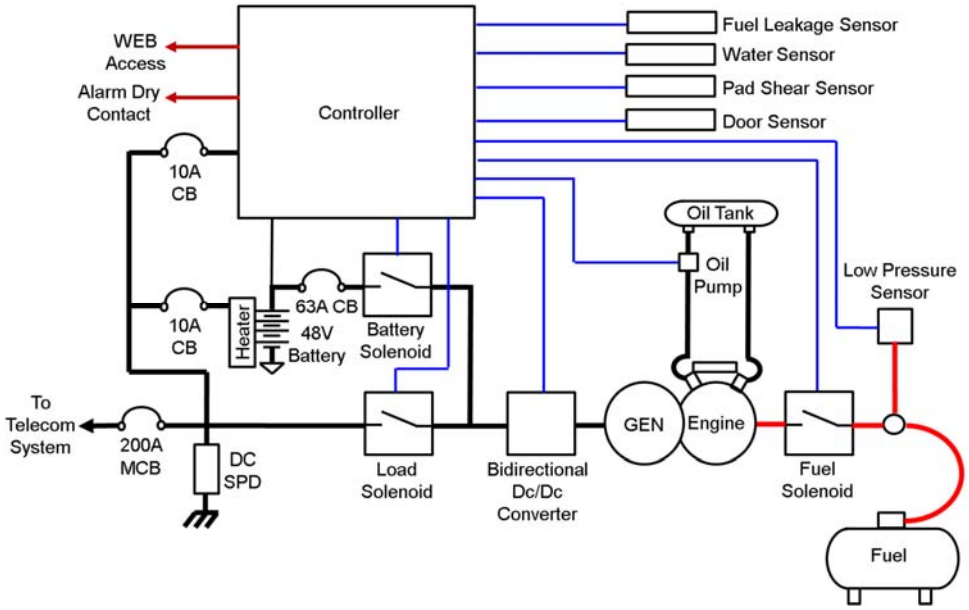

2.3.8 Cable Requirement

A Listed ZMVV lug must be used for connection to the output. Power cable and alarm cable entry recommend to use listed conduit for entry.

Size of conducts follows UL 60950-1 Table 3B as follow,

RATED CURRENT of equipment A	Minimum conductor sizes		
	Nominal cross-sectional area mm²		AWG or kcmil [cross-sectional area in mm²] see Note 2
Up to and including 6		0,75 [a]	18 [0,8]
Over 6 up to and including 10	(0,75) [b]	1,00	16 [1,3]
Over 10 up to and including 13	(1,0) [c]	1,25	16 [1,3]
Over 13 up to and including 16	(1,0) [c]	1,5	14 [2]
Over 16 up to and including 25		2,5	12 [3]
Over 25 up to and including 32		4	10 [5]
Over 32 up to and including 40		6	8 [8]
Over 40 up to and including 63		10	6 [13]
Over 63 up to and including 80		16	4 [21]
Over 80 up to and including 100		25	2 [33]
Over 100 up to and including 125		35	1 [42]
Over 125 up to and including 160		50	0 [53]
Over 160 up to and including 190		70	000 [85]
Over 190 up to and including 230		95	0000 [107]
Over 230 up to and including 260		120	250 kcmil [126]
Over 260 up to and including 300		150	300 kcmil [152]
Over 300 up to and including 340		185	400 kcmil [202]
Over 340 up to and including 400		240	500 kcmil [253]
Over 400 up to and including 460		300	600 kcmil [304]

The minimum specified tightening torque shall not be less than 90 percent of the value specified in UL 2200 Tables 69.1 as applicable for the wire size determined. Below table is Tables 69.1.

Exception: The torque value is not prohibited from being less than 90% when the connector is investigated in accordance with the lesser assigned torque value in either:

1) The Standard for Wire Connectors, UL 486A-486B,

2) The Standard for Equipment Wiring Terminals for Use with Aluminium and/or Copper Conductors, UL 486E.

Tightening torque for pressure wire connectors having screws

Size of wire that is to be used for connection of the unit		Tightening torque, pound-inches (N·m)			
		Slotted head no. 10 (4.7 mm) and larger[a]		Hexagonal head – external drive socket wrench	
AWG/kcmil	(mm^2)	Slot width – 0.047 inch (1.2 mm) or less; and slot length – 1/4 inch (6.4 mm) or less	Slot width – over 0.047 inch (1.2 mm); or Slot length – over 1/4 inch (6.4 mm)	Split-bolt connectors	Other connections
18 – 10	(0.82 – 5.3)	20 (2.3)	35 (4.0)	80 (9.0)	75 (8.5)
8	(8.4)	25 (2.8)	40 (4.5)	80 (9.0)	75 (8.5)
6 – 4	(13.3 – 21.2)	35 (4.0)	45 (5.1)	165 (18.6)	110 (12.4)
3	(26.7)	35 (4.0)	50 (5.6)	275 (31.1)	150 (16.9)
2	(33.6)	40 (4.5)	50 (5.6)	275 (31.1)	150 (16.9)
1	(42.4)	–	50 (5.6)	275 (31.1)	150 (16.9)
1/0 – 2/0	(53.5 – 67.4)	–	50 (5.6)	385 (43.5)	180 (20.3)
3/0 – 4/0	(85.0 – 107.2)	–	50 (5.6)	500 (56.5)	250 (28.2)
250 – 350	(127 – 177)	–	50 (5.6)	650 (73.4)	325 (36.7)
400	(203)	–	50 (5.6)	825 (93.2)	325 (36.7)
500	(253)	–	50 (5.6)	825 (93.2)	375 (42.4)
600 – 750	(304 – 380)	–	50 (5.6)	1000 (113.0)	375 (42.4)
800 – 1000	(406 – 508)	–	50 (5.6)	1100 (124.3)	500 (56.5)
1250 – 2000	(635 – 1016)	–	–	1100 (124.3)	600 (67.8)

NOTE – Connectors having a clamping screw with multiple tightening means (for example, a slotted, hexagonal head screw) are to be tested using both values of torque.

[a] For values of slot width or length not corresponding to those specified, select the largest torque value associated with the conductor size. Slot width is the nominal design value. Slot length is to be measured at the bottom of the slot.

3 Installation Process

This section will outline requirements for Genset installation cabinet. The cabinet comes fully assembled and all the connections other than customer fuel, DC and alarm connections are made at the factory. There is no internal, shelf, or module wiring required.

Detailed requirements for installation must be provided in site-specific Methods of Procedure documents.

Note! Follow all local codes and regulations, National Electrical Code NFPA70, Liquefied Petroleum Gas Code NFPA58, and Standard for the Installation and Use of Stationary Combustion Engines and Gas Turbines NFPA 37.

3.1 Site Preparation

3.1.1 Site Selection

Install the cabinet in a well-ventilated environment. The equipment is designed for installation in areas designated as "Restricted Access Location" only. Secure the enclosure to a concrete or other non-combustible floor. Appropriate site selection is important before the installation of the APU. The following guidelines can be followed during the site selection process.

The site selected must be in an area where the soil is stable and does not have underground landforms that can reduce the structural integrity of the concrete pad. The site must have convenient roadway access for vehicles used to install the enclosure as well as for periodic maintenance. The enclosure must have sufficient, functional easement to have all doors open and permit easy access to the equipment for installation as well as maintenance. The enclosure along with the equipment generates heat. If possible, care must be taken to locate the enclosure away from other heat generating devices to allow for air movement around it.

Follow local code requirements to meet right of way easements, bylaws and building codes. Clearance Requirements: For access and maintenance purposes Delta recommends Five feet on exhaust side, three feet of clearance on other three sides of the APU. See chapter 2.2.3 for detailed requirements.

Warning! Fire Hazard: Exhaust heat/gasses could ignite combustibles or structure resulting in death or serious injury. Exhaust Outlet Side of weather-proof enclosure must have at least 5ft (1.5M) min clearance from any structures, shrubs, trees, or any kind of vegetation.

Warning! Poison Gas Hazard: Engine exhaust contains carbon monoxide a poisonous gas that could kill you in minutes. You CANNOT smell it or see it. Operate ONLY outside far from windows, doors, and vents. Install carbon monoxide alarms. DO NOT run in partially enclosed spaces. Point engine exhaust away from occupied spaces.

3.1.2 Installation Pad

A suitable concrete pad must be provided for installation. Refer chapter 2.2.2 for requirement of mount surface.

3.1.3 Propane Tank

A suitable propane tank must be provided for fuelling with 80% Propane. It is necessary to have a first regulator mounting with propane tank. And the output pressure of propane must be 10~12 in W.C.

Please contact local propane vender to provide propane tank, regulator and fuel piping.

3.1.4 Natural Gas Meter

The gas utility company should have the meter installed prior to generator arrival for fuelling with Natural Gas. Meter configuration must comply with local codes.

Please contact local gas vender to provide the services.

3.1.5 Grounding Requirements

The genset cabinet frame ground provides a fault current discharge path and must be connected to the site ground rod system. Power and signal wiring in the DC Genset is isolated from the local frame ground. Power and signal wiring between the DC Genset and telecom equipment cabinet system carries a system ground to ensure common ground between the Genset and connected Telecom power system, with reference ground connection in the telecom equipment cabinet.

Warning! Improper genset grounding can result in injury or death or damage to equipment.

3.2 Unpack Cabinet

Prior to removing the system from the box, note any damage to the packaging. Remove the Genset from the packaging and inspect it for any dents or damage. If any damage is noted, contact the carrier immediately.

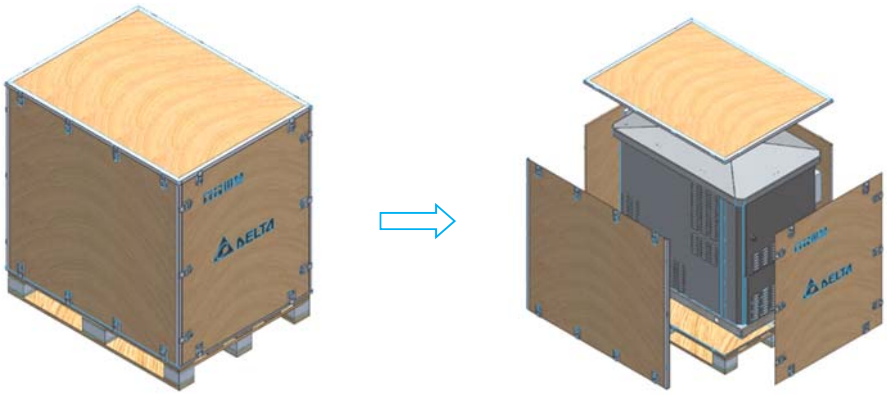

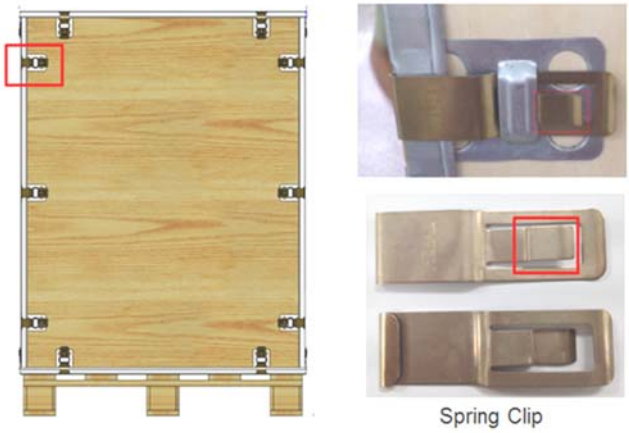

Step 1 Remove spring clip from U buckle on top poly wood and remove top poly wood

Step 2 Remove spring clip from U buckle on side poly wood and remove side poly wood

Step 3 Verify receipt of all material according to the Bill-Off-Material (BOM).

Step 4 Open the door, loosen screw remove roof.

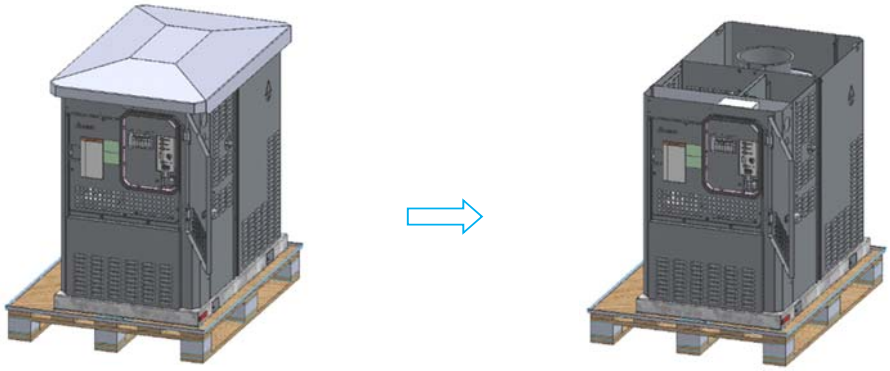

Step 5 Loosen battery two cover screws; remove left and right side cover.

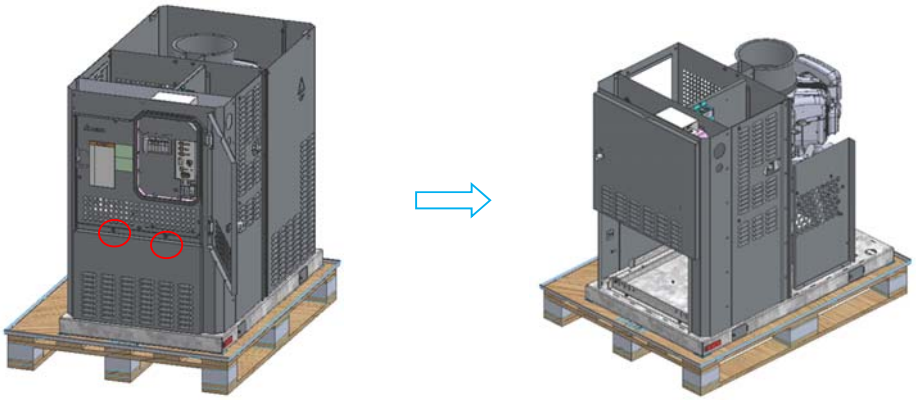

Step 6 Remove the four bolts connecting the enclosure to the pallet using a 19 mm socket.

Genset is unsecured from the pallet and ready for installation

3.3 Mount Genset

Note! Refer to chapter 3.1.1 - site MOP for more detail on mounting the cabinet.

Step 1 Mark and drill mounting anchor locations on the mounting pad per template. Four ¾” holes are provided in the genset base to accept mounting anchors.

Step 2 Lift genset from pallet and place on pad.

- Holes are provided for lifting bars.

- Use spreader bars as required. Ensure proper spreader bars and slings are used (no frays, tears, or cuts in slings)

- Ensure proper clearance & communication is understood prior to connecting to crane.

- Ensure staging area is free from traffic, personnel, or uneven terrain.

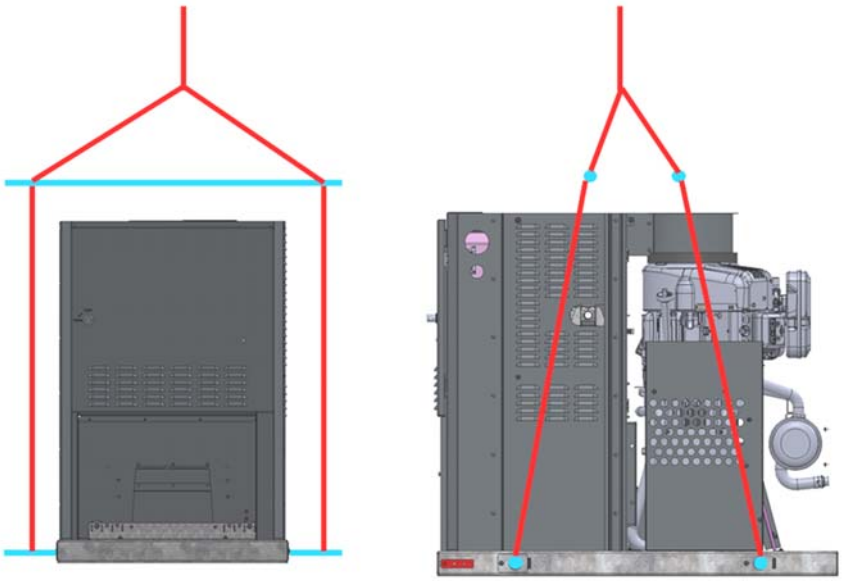

Warning! Heavy Equipment: The weight of the equipment requires suitable safety considerations. Additional personnel or lifting equipment may be needed.

Caution! THE CABINET IS SUITABLE FOR MOUNTING ON CONCRETE OR OTHER NONCOMBUSTIBLE SURFACES ONLY.

Step 3 Secure anchors

Step 4 Assemble side cover and battery compartment cover screws using T20 Torx bit.

Step 5 Close door latch using 7/16” hex tool or nut driver.

3.4 Fuel Hook-up

3.4.1 Fuel Hook-up: Propane Tank

Note! Refer to site MOP for more detail on Fuel Hook-up.

Step 1 Check and verify site preparation is in compliance with all local codes.

Step 2 Per local code, trench from LP gas tank location to genset location.

Step 3 In trench, to install one continuous piece of PE gas pipe from genset to LP gas tank.

Step 4 Install fittings and flexible risers on each end of the PE gas pipe.

Step 5 Connect PowerGen 7500 flexible gas riser to PowerGen 7500.

Step 6 Connect another flexible gas riser to LP gas tank.

Step 7 Thoroughly check the fuel system for vapor leaks. Use appropriate leak detector liquid or soap-water solution with the fuel system pressurized to the cabinet with 0.5 to 1.0 psi.

Warning! Observe all safety precautions when working with fuel lines. The instruction and illustrations provide are for general reference only. Installation should ONLY be done by qualified personnel. Delta is not liable for gas leaks resulting from improper installation.

3.4.2 Fuel Hook-up: Natural Gas Utility

Note! Refer to site MOP for more detail on Fuel Hook-up.

Step 1 Check and verify site preparation is in compliance with all local codes.

Step 2 Per local code, trench from utility NG meter location to genset location,

Step 3 In trench, to install one continuous piece of PE gas pipe from genset to NG meter.

Step 4 Install fittings and flexible risers on each end of the PE gas pipe.

Step 5 Connect PowerGen 7500 flexible gas riser to PowerGen 7500.

Step 6 Connect another flexible gas riser to portable- installation (temporary) LP gas tank.

Step 7 Thoroughly check the fuel system for vapor leaks. Use appropriate leak detector liquid or soap-water solution with the fuel system pressurized to the cabinet with 0.5 to 1.0 psi.

Step 8 Check and verify compliance with all local codes before connecting gas to the fuel system.

Warning! Observe all safety precautions when working with fuel lines. The instruction and illustrations provide are for general reference only. Installation should ONLY be done by qualified personnel. Delta is not liable for gas leaks resulting from improper installation.

3.4.3 Fuel Selection: LP Propane or NG Natural Gas

The genset factory default is configured for LP fuelling. In case of the fuel is NG (natural Gas), follow below procedure to configure for NG fuelling:

Step 1 See section 3.12, change setting “Fuel Type” from “Off LP” to “On NG”.

Step 2 Change Gas Hazard Sensor switch from “PROPANE” to “NATURAL GAS”.

Step 3 To adjust fuel mixer idle screw to 4.75 turns.

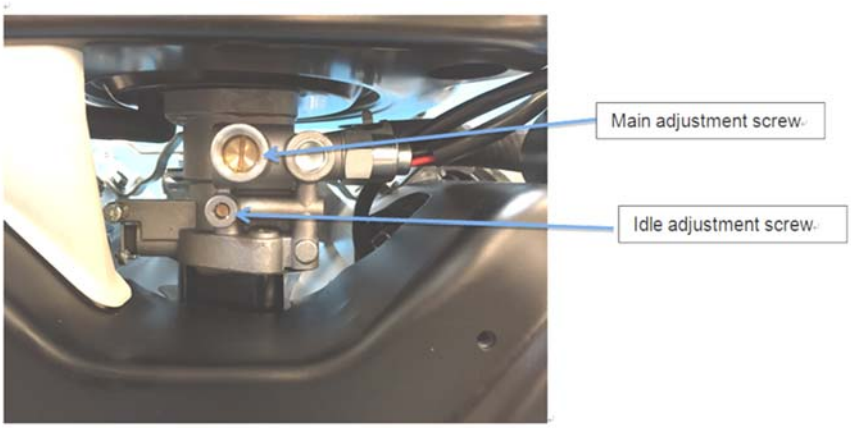

Caution! Incorrect fuelling configuration will affect system performance and emissions.

3.5 DC Output Connections and Alarm Connections

Step 1 Prepare and secure two conduit runs per the Site CD’s and IOM.

Step 2 Use appropriately sized punch set to create knockout’s to penetrate cabinet wall(s) as required.

Step 3 Run one 2” conduit and load with 1 run of 2/0 and pull string from PowerGen 7500 to RBS/SSC cabinet.

Step 4 Run one 1” conduit and load with CAT 5/6 and pull string from PowerGen 7500 to RBS/SSC cabinet.

Step 5 Terminate CAT 5/6 at Alarm Dry contact in PowerGen 7500 and in RBS/SSC cabinet.

Step 6 Lug conductors and terminate 2/0 at termination posts in PowerGen 7500 and in injector box in RBS/Andersen generator connector in SSC cabinet.

Step 7 Trench as required ensuring all safety precautions are taken to ensure no damage to any existing conduits, gas lines, etc. and ensure all code requirements are met.

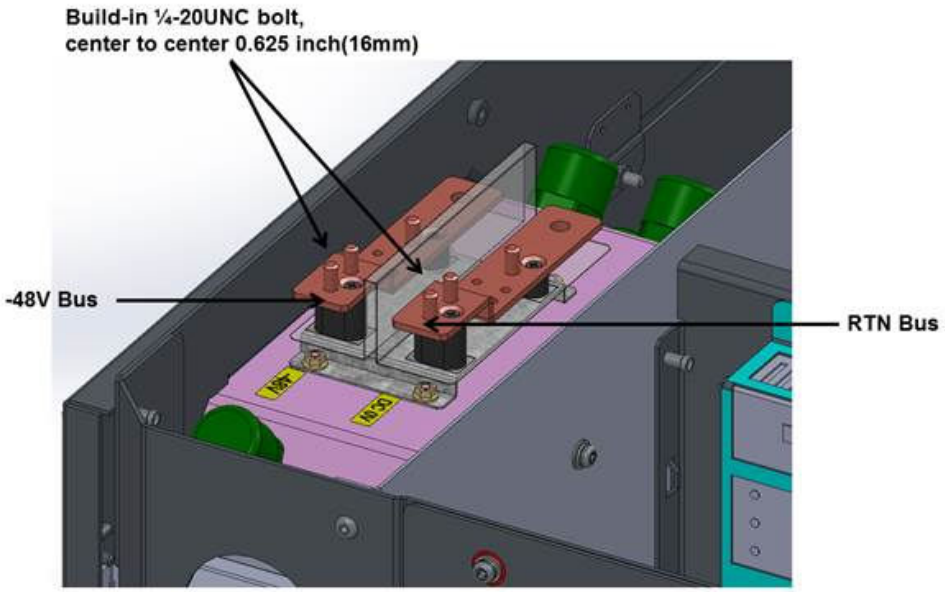

3.6 Engine Oil

Step 1 Remove dipstick.

Step 2 Pour min 42oz oil.

Step 3 Check oil level on dipstick.

Step 4 Insert and secure dipstick.

Caution! Fill engine with oil and check engine dipstick level. Do not over-fill oil. Filling the remote tank will not fill engine with oil.

Caution! Engine requires special formulated oil supplied by Delta. The use of improper oil will affect performance and void warranty. Call Delta Support Line (877)335-8208.

Note! Any attempt to crank or start the engine before it has been properly serviced with the recommended oil will result in equipment failure.

3.7 Extender Tank Oil

Step 1 Remove roof

Step 2 Remove oil tank cap.

Step 3 Pour 2gal oil, fill to lower fill ring only.

Step 4 Secure cap of oil tank.

Step 5 Assemble roof using T20 Torx bit.

Caution! Fill engine with oil and check engine dipstick level. Do not over-fill oil. Filling the remote tank will not fill engine with oil.

Caution! Engine requires special formulated oil supplied by Delta. The use of improper oil will affect performance and void warranty. Call Delta Support Line (877)335-8208.

3.8 External Chassis Ground Connection

The Genset has a ground connection with ¼”-20 threaded holes with 5/8” center-to-center. Delta recommends 2 AWG wire.

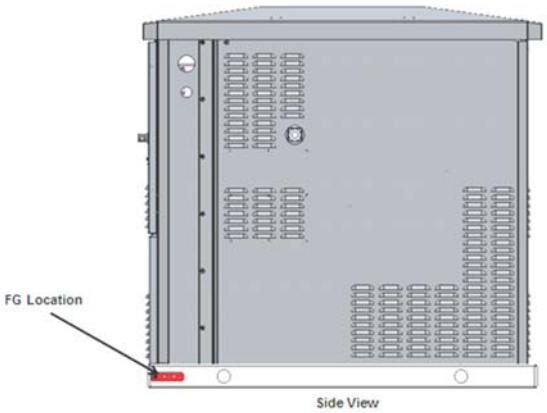

Step 1 Route ground wire from CRGB to the side of the cabinet.

Step 2 Connect the ground wire to the ground connection and secure with the provided hardware.

3.9 Start Battery Installation (optional)

If Start Batteries are provided they connect to a 63A breaker located in the genset control section. One (1) set of battery cables is pre-wired to the battery enclosure for battery connection. Use the following steps to install the batteries and attach the DC wires to the battery bus bar.

Note! Internal start battery is 48V.It is connecting 4pcs 12V battery in series.

Step 1 Ensure battery breaker is in the off position.

Step 2 Install the batteries to the battery enclosure and connect three (3) battery jumper bus bars (provided by the battery supplier).

Step 3 Clean all battery terminals and apply No-OX to each terminal prior to any connection.

Note! It is recommended to secure each battery terminal with 97 inch-lbs of torque.

Note! For more detail, please contact the battery manufacturer (GNB); and the instruction from battery manufacturer should take precedence.

Step 4 Connect the positive (+) Battery cable to the positive terminal and secure the screw with 10mm insulated wrench.

Step 5 Connect the negative (-) Battery cable (blue) to the negative terminal and secure the screw with 10mm insulated wrench.

Step 6 Secure the battery cables with two (2) tie wraps.

Step 7 Add the battery terminal covers as shown below.

Step 8 Do not activate breaker until you have completed the Installation Procedure in section 3.

Note! When replacing the battery, use the same battery identified in chapter 2.1. And keep the same number in series.

Caution! Do not dispose of battery or batteries in a fire. The battery is capable of exploding.

Caution! Do not open or mutilate the battery or batteries. Released electrolyte has been known to be harmful to the skin and eyes and to be toxic.

Caution! A battery presents a risk of electrical shock and high short circuit current. The following precautions are to be observed when working on batteries.

1) Remove watches, rings, or other metal objects,

2) Use tools with insulated handles,

3) Wear rubber gloves and boots,

4) Do not lay tools or metal parts on top of batteries,

5) Disconnect charging source prior to connecting or disconnecting battery terminals, and

6) Determine the battery is inadvertently grounded. When inadvertently grounded, remove source of ground.

3.10 Signal Connections

3.10.1 Alarm Relay Connection

A terminal block in the genset control section provides four (4) form-C relay for alarm and status indication. The connections are available via a push-lever compression style terminal block. The terminal block will accept Solid wire sizes between 26 AWG to 20 AWG.

See section 4.4 Alarm Events for alarm mapping details.

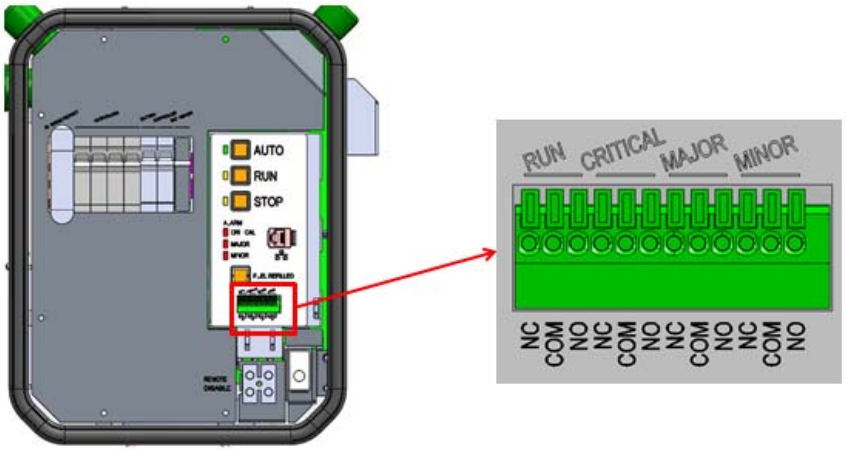

Step 1 Connect wiring from your alarm cross-connect to the power system.

Step 2 Connect the common of the desired alarm to COM.

Step 3 Connect either the normally open or the normally closed (based on your expected alarm polarity) to either NO or NC respectively.

Step 4 Repeat for all desired relays.

3.10.2 Remote Disconnect Connection

The user may remotely disable APU by providing a short by means of switch or relay across the Remote Disconnect terminal block in the genset control section. The screw terminal block will accept wire sizes between 26 AWG to 12 AWG.

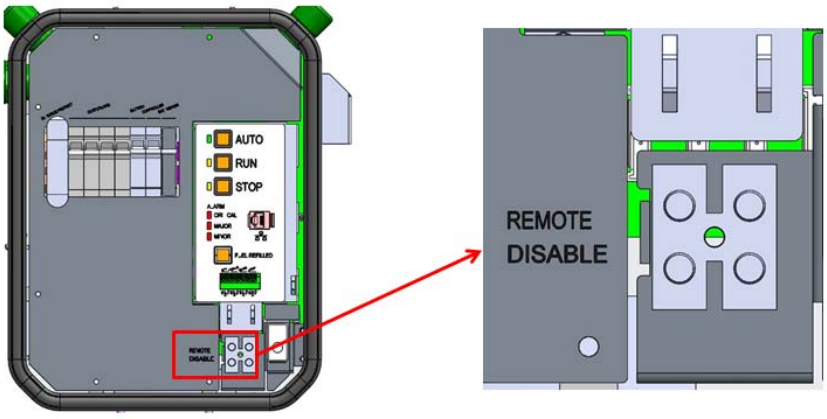

Step 1 Connect wiring from your remote relay or switch.

3.11 WEB Access

A network port on the control panel provides a graphical user interface (GUI) via a standard web browser.

Step 1 Connect an RJ45 Ethernet cable from a laptop to the control panel RJ45 Ethernet port.

Step 2 Open Internet Explorer, browse to address http://192.168.1.1.

Network setting factory default:

IP Address 192.168.1.1

Netmask 255.255.255.0

Gateway 192.168.1.254

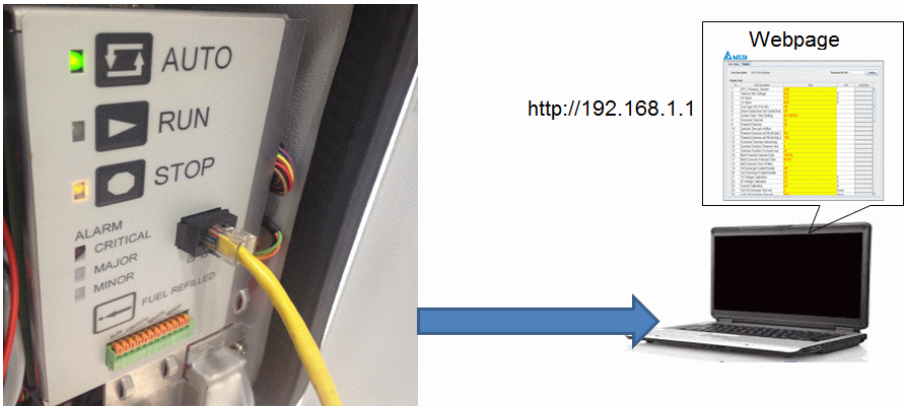

3.12 Password and Network Setup

Step 1 Enter “8888” in field “Password for Edit” and click “Confirm” to show “Edit” buttons.

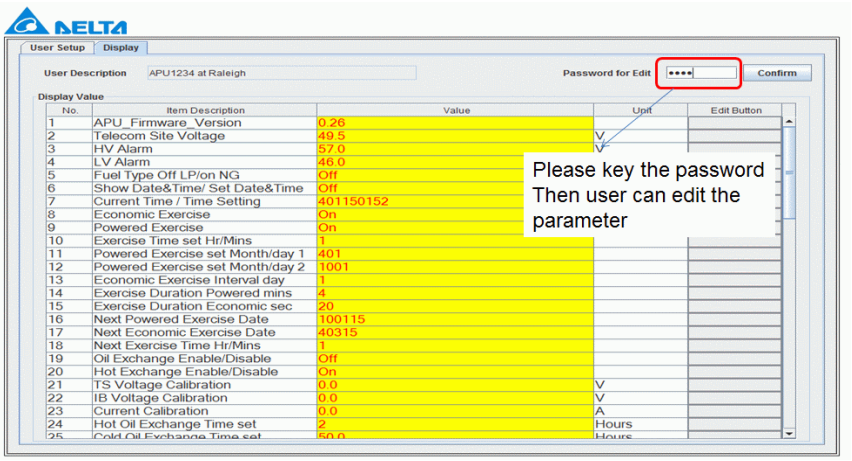

Step 2 Click on tab “User Setup”. Edit Network Setup and User Description per job instructions.

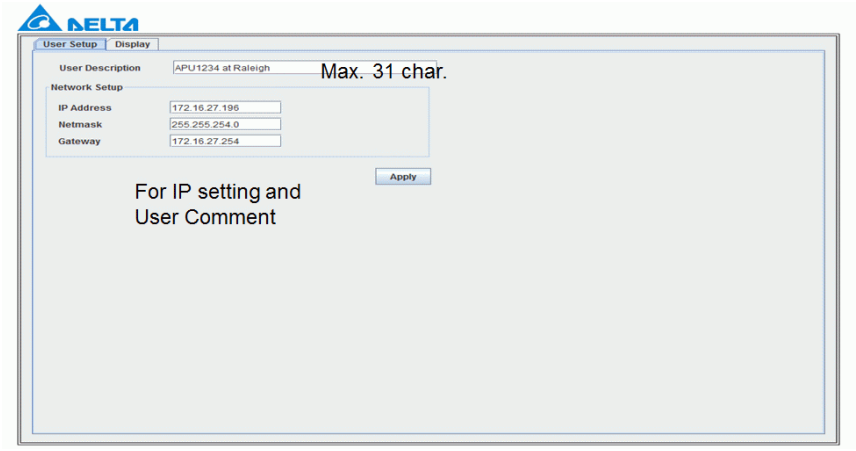

Step 3 Click tab “Display” to return to parameter edit. Set Time and Date. For the frame, please refer chapter 4.3.7 WEB access.

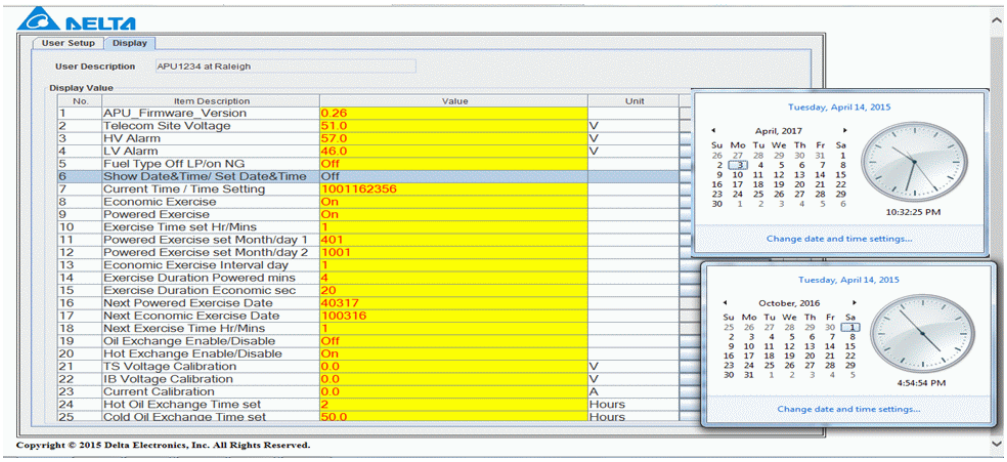

Step 4 Edit other site parameters per job instructions.

Caution! Factory default parameters with no changes are suitable for nearly all applications (with the exception of fuel type). Incorrect parameter settings may defeat proper genset backup operation.

3.13 Commissioning

3.13.1 No Fuel Crank Test

Step 1 Verify battery voltage and polarity from attached telecom cabinet are correct at the APU terminals.

Step 2 If equipped with internal start battery; verify voltage and polarity are correct.

Step 3 To turn APU Main 200A breaker ON.

Step 4 If equipped with internal start batteries, turn Battery 63A breaker ON.

Step 5 Turn APU PLC Control 10A breaker ON.

- Control panel boots up in STOP-MANUAL-Mode.
- Verify STOP yellow LED is lit.
- APU is ready to verify engine crank with no fuel.

Step 6 Push RUN button to start the APU in Run-Manual Mode

- The APU load solenoid will close connecting the battery to the genset
- The genset motor will spin the engine
- The engine will attempt to start but fail due to no fuel
- After 2min the crank attempt will stop and the red MAJOR ALARM LED will light due to Pre-Start Fail

Step 7 Push the STOP button to stop attempting to start and to clear the alarm.

No Fuel Crank Test is complete.

3.13.2 Initial Start-up Test

Step 1 To connect two spark plugs on engine.

Step 2 To turn Propane or Natural Gas fuel valve ON at source. Verify fuel pressure at the LP tank or NG meter.

Step 3 Verify battery voltage and polarity from attached telecom cabinet are correct at the APU terminals.

Step 4 If equipped with internal start battery; verify voltage and polarity are correct.

Step 5 To turn APU Main 200A breaker ON.

Step 6 If equipped with internal start batteries, turn Battery 63A breaker ON.

Step 7 Turn APU PLC Control 10A breaker ON.

- Control panel boots up in STOP-MANUAL-Mode.

- Verify STOP yellow LED is lit.

- APU is ready start.

Step 8 Push RUN button to start the APU in Run-Manual Mode

- The APU load solenoid will close connecting the battery to the genset

- The genset motor will spin the engine

- The engine will start

Step 9 Push the STOP button to initiate cool down and shutdown:

- The genset will reduce output to no power, and then run for 1min without fuel to cool down

- The APU load solenoid will open disconnecting the genset from the telecom cabinet

- The engine will stop

Initial Start-up Test is complete.

3.14 Check List

Once the installation is complete, verify the following

☐	1. Engine oil at proper level
☐	2. Extender Tank oil at proper level
☐	3. Electrical connections are secure
☐	4. Output polarity is correct
☐	5. Start Battery (optional) polarity is correct
☐	6. Output connection voltage is normal
☐	7. Gas connections checked for leaks
☐	8. Fuel pressure normal
☐	9. No Fuel Crank Test is completed
☐	10. Initial Start-up Test is completed

4 Operation

4.1 Operating Modes

4.1.1 Auto-Mode

Press “AUTO” to enter Auto-Mode. Auto-Mode is the normal operation mode of the genset, and provides automatic unattended backup of a connected telecom cabinet.

- If telecom site voltage goes below 48V the genset starts and provides 52V output.

- If telecom site voltage goes above 53V the genset shuts down.

Below is the integrating behaviour of PowerGen 7500:

AC Normal:

Under normal conditions with AC power to the telecom cabinet, telecom cabinet rectifiers provide power to load equipment at float voltage above 53V, and the genset is not running.

AC Fail:

When AC fails, telecom cabinet batteries provide power to load equipment, and begin to discharge. When the telecom cabinet batteries discharge below 48V the genset starts and provides power to the load and power to recharge the telecom cabinet batteries to 52V. Genset output is actively limited to prevent battery recharge overcurrent.

AC Recovery:

When AC recovers, telecom cabinet rectifiers resume providing power to load equipment and recharge the telecom cabinet batteries a float voltage above 53V and the genset goes to no output. When voltage goes above 53V the genset cool down and shuts down.

Caution! The crank current of PowerGen 7500 is 50A and keep 1 minute. In case of there is no internal battery, telecom site battery will support the crank current and the voltage will drop soon.

Caution! The cool down current of PowerGen 7500 is 50A and keep 1 minute. In case of there is no internal battery and rectifier cannot support the additional load, telecom site battery will discharge and show discharge alarm.

4.1.2 Run-Manual-Mode

Press “RUN” to enter Run-Manual-Mode and start the genset. Run-Manual-Mode causes the genset to run even if voltage is above 53V. This mode is useful to verify or troubleshoot genset operation when AC power is present and telecom cabinet rectifier output is above 53V.

4.1.3 Stop-Manual-Mode with Cool Down

Press “STOP” to enter Stop-Manual-Mode and stop the genset with 1min cool down. Stop-Manual-Mode causes the genset to stop even if voltage is below 48V and telecom cabinet batteries are on discharge. This mode is useful to verify or troubleshoot when output is below 48V.

4.1.4 Stop-Manual-Mode No Cool Down

Hold “STOP” for 5sec stop the genset immediately with no cool down. Stop-Manual-Mode No Cool Down causes the genset to stop immediately under any circumstances without cool down cycle.

4.1.5 Automatic Exercise

Automatic Exercise performs unattended maintenance runs to distribute engine oil. PowerGen 7500 provide two kind of exercise functions and will do them automatically.

<u>Powered Exercise:</u>

Genset starts and runs two times per year, once in the spring and once in the fall, and runs for 20 minutes. In the mode, PowerGen 7500 real start up and power from fuel.

<u>Economic Exercise:</u>

Genset spins under battery power for 60 seconds every 30 days. In the mode, PowerGen 7500 only crank motor to let oil lubricate the engine but disconnect fuel to prevent real start up.

4.1.6 No Fuel Warning

PowerGen 7500 provide two warning alarm functions to high light the LP fuel tank will end. One is by countdown timer; the other is by fuel pressure. When PowerGen 7500 issue the alarm, customer need ask local LP vender to fill fuel, then press FUEL REFILLED to clear the pre-warning alarm.

Countdown Timer:

Customer set a max operating time base on LP tank capacity. The PowerGen 7500 will countdown a timer when running. When timer counts down until 30% reserve time, then PowerGen 7500 issue No Fuel Pre-alarm.

Fuel Pressure:

The PowerGen 7500 support an optional part to measure fuel pressure. If the input pressure is low than 5.5in W.C. (50% pressure), then PowerGen 7500 issue No Fuel Alarm (not pre-alarm).

Note! For Countdown Timer, customer need use 80% total tank capacity for base. And use 5.8 L per hour at max output (7.5KW) to calculate the operating time. If the output is not max output (7.5KW), you can refer below table.

Load	Fuel Consumption(Kg/Hr)	Fuel Consumption(L/Hr)
0KW	1.36 Kg/Hr	2.68 L/Hr
2.5KW	1.87 Kg/Hr	3.69 L/Hr
5.0KW	2.38 Kg/Hr	4.69 L/Hr
7.5KW	2.90 Kg/Hr	5.72 L/Hr

Tanque de 100 Lbs = 94 litros
94/3.69 = 25 horas

4.2 System Specification

4.2.1 DC Genset Specifications

Item	Specification
DC Output Voltage	52.5Vdc
DC Output Voltage Regulation	<±0.5V
Output Current	144A max
Automatic Operation	Auto-Mode: Start at V<48V, stop at V>53V
Acoustic Noise	< 76 dBA at 23ft (7m) typical
Dimensions	42”L x 27”W x 40”H

Weight	330lb without internal battery 635lb with internal start battery option
Hi-Pot	500vac output to ground
EMC (Standby)	EN55022/FCC Conducted Class A EN55022/FCC Radiated Class A
Extended oil system	Oil tank and pump to support 500 run-hours between oil changes
Agency Compliance	Listed per UL2200 Applicable sections of NFPA 37/54/58 for automatic unattended operation of remotely located generators.
Safety Protections	Over Voltage shutdown Under Voltage shutdown Over Speed shutdown Under Speed shutdown Over Crank shutdown Over Temperature shutdown Gas Leak shutdown Pad-shear shutdown (optional) Water Intrusion shutdown (optional)
Internal Start Battery	100A-hr (optional)
Battery Heater	220W (optional)

4.2.2 Engine Specifications

Item	Specification
Type	Briggs & Stratton Model 35
Technology	OHV, vertical shaft, V-twin, air cooled
Rating	12.5HP
Displacement	570cc
Engine Speed	3600±150 RPM
Throttle Control	Mechanical Governor
Oil	5W-30 Custom Synthetic - Oil change 50 run-hrs no extender tank - Oil change 500 run-hrs with extender tank
Oil Filter	Extended Life

4.2.3 Fuel Supply Specifications

Item	Specification
Fuel Type	- Liquid Propane (LP): HD-5 propane from local storage tank

	- Natural Gas (NG): Methane from commercial utility
Fuel Access	Pipe with ¾” Male NPT thread
Fuel Pressure	- Rated LP: 280 mmAq or 11inch W.C. NG: 130 mmAq or 5 inch W.C. - Max LP: 300 mmAq or 12 inch W.C. NG: 178 mmAq or 7 inch W.C.
Fuel Consumption	Full Load: LP: 56.4 ft^3/hr, 1.57 gal/hr NG: 121 ft^3/hr
Gas Leakage Sensor	- Support Methane and Propane in one sensor - Calibration level is 20% of LEL for selected gas. - 12Vdc power input - Free Dry Contact Alarm Output
Low Fuel Pressure Sensor (Optional)	- Low fuel alarm at 5.5in W.C of fuel pressure. - Free Dry Contact Alarm Output

4.3 Interface

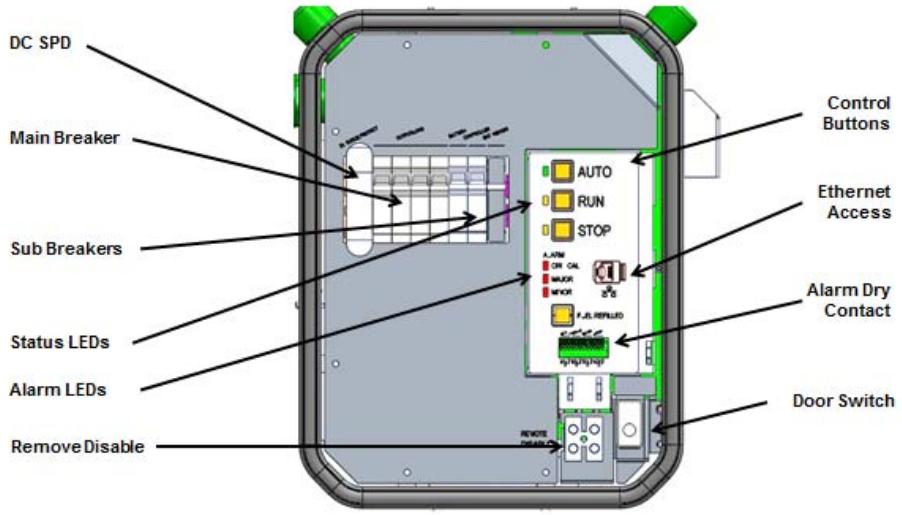

4.3.1 Buttons

AUTO – Press to enter Auto-Mode for automatic backup

RUN – Press to enter Run-Manual-Mode to start genset

STOP – Press to enter Stop-Manual-Mode to stop genset

– Press more than 5sec to stop without Cool Down

FUEL REFILLED – Press to reset the genset Low Fuel Alarm Timer after refuelling.

4.3.2 Status LED

AUTO (Green) – Indicates genset is in Auto-Mode.

– Flashing indicates genset is in Auto-Mode but do special function

RUN (Yellow) – Indicates genset is running.

– Flashing indicates Oil Exchange or Cranking in process

STOP (Yellow) – Indicates genset is not running.

– Flashing indicates Cool Down in process.

Existing Mode	Existing Status	Auto LED (Green)	Run LED (Yellow)	Stop LED (Yellow)
No Power	No Power	●	●	●
Auto-Mode	Standby	☼	●	☼
Auto-Mode	Crank	☼	1	●
Auto-Mode	Running	☼	☼	●
Auto-Mode	Cool Down	☼	●	1
Auto-Mode	Oil Exchange	1	1	●
Auto-Mode	Powered Exercise	1	☼	●
Auto-Mode	Economic Exercise	1	●	●
Manual-Run-Mode	Crank	●	1	●
Manual-Run-Mod	Running	●	☼	●
Manual-Stop-Mode	Cool Down	●	●	1
Manual-Stop-Mode	Stop	●	●	☼
Manual-Stop-Mode	Alarm Stop	●	●	☼

1. = LED off

2. = LED lit

3. = LED flashing

4.3.3 Alarm LED

CRITICAL (Red) – Indicates genset has shut down due to emergency alarm state.

MAJOR (Red) – Indicates genset is at risk of immediate shutdown due to an alarm state.

MINOR (Red) – Indicates genset can function normally but requires attention.

LED Function	LED Color	Status	Alarm Mapping
CRITICAL	Red		- No Critical Alarm
			- Engine Start Fail - OVP Alarm - HV Alarm - HT Alarm - Oil Leakage - OSP Alarm - Converter Fail - Loss Oil Sensor - Gas Leakage - Pad Shear Alarm - Water Intrusion - LSP Alarm - Overload Alarm - Motor Fault
MAJOR	Red		- No Major Alarm
			- Low Fuel - Pre-Low Fuel
			- Pre-Start Fail - Pre-HT Alarm - LVP Alarm - HS Alarm - Motor LV - Engine Stop Fail - LS Alarm - Manual Over Time - 500H Maintain - Oil Pump Fuse Fail

MINOR	Red		- No Minor Alarm
			- Remote Disable
			- LV Alarm - Oil Low Pressure - DC SPD Fault - Door Open - Internal Battery LV - 100H Maintain - 50H Maintain

1. = LED off

2. = LED lit

3. = LED flashing

4.3.4 RUN Status Relay

RUN Relay terminals allow remote monitoring of genset operation. The free contact supports below signal rating.

- 1A @ 24Vdc

- 1A @ 110Vac

- 0.1A @ 60Vdc

The free contact is form C type and below is the logic table.

Item	RUN	STOP	No Power
COM & NO	Close	Open	Open
COM & NC	Open	Close	Close

4.3.5 Alarm Relays

Alarm Relay terminals allow remote monitoring of genset alarms. The free contact supports below signal rating.

- 1A @ 24Vdc

- 1A @ 110Vac

- 0.1A @ 60Vdc

The free contact is form C type and below is the logic table.

Item	Normal	Alarm	No Power
COM & NO	Open	Close	Close
COM & NC	Close	Open	Open

Note! For the detail alarm information, please refer chapter 4.3.3 Alarm LED and chapter 4.4 Alarm Events.

4.3.6 Remote Disable

PowerGen 7500 provides a digital input for Remote Disable function. In case of Remote Disable trigger, the Genset must stop.

Function Active: Short the two pins of Remote Disable Terminals

Function Inactive: Open the two pins of Remote Disable Terminals

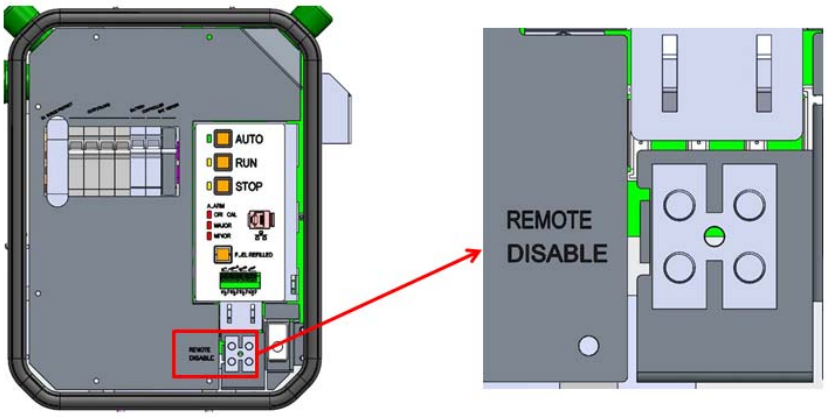

4.3.7 WEB Access

Caution! Factory default parameters with no changes are suitable for nearly all applications (with the exception of fuel type). Incorrect parameter settings may defeat proper genset backup operation.

Parameter	Default	Unit	Range	Read Only
APU_Firmware_Version	NA			Yes
User Comment			min 31 characters	
Telecom Site Voltage	**.*	V		Yes
HV Alarm	57.0	V	55.0 ~60.0	
LV ALARM	46.0	V	42.0 ~ 50.0	
Fuel Type Off LP/on NG	Off		On: NG, Off: LP	
Show Date&Time/ Set Date&Time	Off		On: Set Date&Time Off: Show Date&Time	
Current Time/ Time Setting	CST (UTC-6)		mmddyyhhmm	
Economic Exercise	Enable	On	On: Enable, Off: Disable	
Powered Exercise	Enable	On	On: Enable, Off: Disable	
Exercise Time set Hr/Mins	1000		hhmm	
Powered Exercise set Month/day 1	401		mmdd	
Powered Exercise set Month/day 2	1001		mmdd	
Economic Exercise Interval day	30	Day	1 ~ 365	
Exercise Duration Powered mins	20	Min	1 ~ 60	
Exercise Duration Economic sec	20	Sec	1 ~ 120	
Next Powered Exercise Date	******		mmddyy	Yes
Next Economic Exercise Date	******		mmddyy	Yes
Next Exercise Time Hr/Mins	****		hhmm	Yes
Oil Exchange Enable/Disable	On		On: Enable, Off: Disable	
Hot Exchange Enable/Disable	On		On: Enable, Off: Disable	
TS Voltage Calibration	0	V		
IB Voltage Calibration	0	V		
Current Calibration	0	A		
Clear Meter	Off		On: Clear all Maters and set parameter to default	
Oil_Run_Timer_2Hours	0	Sec		Yes
Fuel _APU_Timer	0	Sec		Yes
100H Maintain timer 1	0	Sec		Yes

500H Maintain timer 2	0	Sec		Yes
50H Maintain timer 3	0	Sec		Yes
Hot Oil Exchange Time set	2	Hours	1 ~ 10	
Maintain Hours Without Oil Tank	50	Hours	0 ~ 400000	
Manual Start Oil exchange	Off		On: Manual Oil Exchange	
Oil Running Timer	0	Mins		
Pre-Low Fuel Warning	On		On: Enable, Off: Disable	
Max Fuel Capacity	50	Hours	1 ~ 250	
Fuel Remaining	***.*	%		Yes
Motor Output Voltage	**.*	V		Yes
Engine Speed	****	RPM		Yes
Internal Battery Voltage	**.*	V		Yes
Converter Current Output	***.*	A		Yes
APU Run Hour Meter	****	Hours		Yes
Alarm Code	**			Yes
History 1 Alarm Code	**			Yes
History 1 Alarm record time	**********		mmddyyhhmm	Yes
History 2 Alarm Code	**			Yes
History 2 Alarm record time	**********		mmddyyhhmm	Yes
History 3 Alarm Code	**			Yes
History 3 Alarm record time	**********		mmddyyhhmm	Yes
History 4 Alarm Code	**			Yes
History 4 Alarm record time	**********		mmddyyhhmm	Yes
History 5 Alarm Code	**			Yes
History 5 Alarm record time	**********		mmddyyhhmm	Yes
History 6 Alarm Code	**			Yes
History 6 Alarm record time	**********		mmddyyhhmm	Yes
History 7 Alarm Code	**			Yes
History 7 Alarm record time	**********		mmddyyhhmm	Yes
History 8 Alarm Code	**			Yes
History 8 Alarm record time	**********		mmddyyhhmm	Yes
History 9 Alarm Code	**			Yes
History 9 Alarm record time	**********		mmddyyhhmm	Yes
History 10 Alarm Code	**			Yes
History 10 Alarm record time	**********		mmddyyhhmm	Yes

4.4 Alarm Events

Below are the all alarm information and behaviour in PowerGen 7500.

Alarm Name	Alarm Cord	Alarm Priority	Stop Genset	Cool Down	Latch Alarm
Engine Start Fail	1	Critical	Yes	No	Yes
OVP Alarm	2	Critical	Yes	No	Yes
HV Alarm	3	Critical	Yes	No	Yes
Pre-HT Alarm	4	Major	Yes	Yes	
HT Alarm	5	Critical	Yes	Yes	Yes
LV Alarm	6	Minor	No		
LVP Alarm	7	Major	No		
Oil Low Pressure	8	Minor	No		
Oil Leakage	9	Critical	Yes	Yes	Yes
OSP Alarm	10	Critical	Yes	Yes	Yes
HS Alarm	11	Major	No		
Converter Fail	12	Critical	Yes	Yes	
Motor Fault	13	Critical	Yes	No	Yes
Loss Oil Sensor	14	Critical	No		Yes
Door Open	15	Minor	No		
Low Fuel	16	Major	No		
Gas Leakage	17	Critical	Yes	No	Yes
Pad Shear Alarm	18	Critical	Yes	No	Yes
Water Intrusion	19	Critical	Yes	No	Yes
Pre-Low Fuel	20	Major	No		
Engine Stop Fail	21	Major	Yes		
LS Alarm	22	Major	No		
LSP Alarm	23	Critical	No		
DC SPD Fault	24	Minor	No		
Internal Battery LV	25	Minor	No		
Pre-Start Fail	26	Major	Yes	No	
Manual Over Time	27	Minor	No		
100H Maintain	28	Minor	No		
500H Maintain	29	Major	No		
Remote Disable	30	Minor	Yes	No	

50H Maintain	31	Minor	No		
Oil Pump Fuse Fail	32	Major	No		
Overload	33	Critical	Yes	No	Yes
APU no any output current	34	Critical	Yes	No	Yes

4.4.1 Pre-Start Fail

Indicates a genset start-up attempt has failed. If the genset start-up is not successful after three attempts, see Engine Start Fail.

4.4.2 Engine Start Fail

Indicates genset start-up has failed three attempts and the genset has shutdown.

Press “STOP” button to clear alarm.

4.4.3 Engine Stop Fail

Indicates genset shutdown has failed.

4.4.4 Motor LV

Indicates DC motor output voltage is low.

4.4.5 Converter Fail

Indicates Dc/Dc Converter failure.

4.4.6 HV Alarm

Indicates telecom system voltage is high >57V.

Press “STOP” button to clear alarm.

4.4.7 OVP Alarm

Indicates telecom system voltage is high and genset is at risk of damage >58V.

Press “STOP” button to clear alarm.

4.4.8 LV Alarm

Indicates telecom system voltage is low <46V.

Clears when voltage is >48V

4.4.9 LVP Alarm

Indicates telecom system voltage is very low <43V and at risk of Telecom System low voltage disconnect.

Clears when voltage is >48V

4.4.10 Pre-HT Alarm

Indicates the engine body is over temperature and the genset will shut down and restart. If the over temperature reoccurs and the genset shuts down three times see HT Alarm.

Press “STOP” button to clear alarm.

4.4.11 HT Alarm

Indicate the engine body is over temperature for a third time and has shut down.

Press “STOP” button to clear alarm.

4.4.12 HS Alarm

Indicates the engine speed is too high >3800 RPM.

4.4.13 OSP Alarm

Indicates the engine has shut down due to over speed >4000 RPM.

Press “STOP” button to clear alarm.

4.4.14 LS Alarm

Indicates the engine speed is too low <3300 RPM.

Alarm clears when >3450 RPM.

4.4.15 LSP Alarm

Indicates the engine speed is too low <3000 RPM.

Press “STOP” button to clear alarm.

4.4.16 Oil Low Pressure

Indicates low engine oil pressure. The genset will shut down and perform an Oil Exchange cycle to add oil to the engine sump.

4.4.17 Oil Leakage

Indicates two low engine oil pressure events have been detected in a two hour period, likely indicating a serious oil leak, and the genset has shut down.

Press “STOP” button to clear alarm.

4.4.18 Loss Oil Sensor

Indicates the low oil pressure sensor or wire-set is damaged.

Press “STOP” button to clear alarm.

4.4.19 Door Open

Indicates the control section door is open.

Close the control section door to clear alarm or pull the door switch out to temporarily disable the alarm.

4.4.20 Gas Leakage

Indicates the gas leakage sensor has detected fuel fumes at 20% Lower Explosive Limit (LEL).

Press “Reset” on gas leakage sensor and press “STOP” button to clear alarm.

4.4.21 Pad Shear Alarm (optional)

Indicates the genset has moved relative the mounting pad.

Press “STOP” button to clear alarm.

4.4.22 Water Intrusion Sensor (optional)

Indicates the water intrusion is above the mounting pad.

Press “STOP” button to clear alarm.

4.4.23 Pre-Low Fuel

Indicates approximately 30% fuel remaining in tank.

Press “FUEL REFILLED” button to clear alarm and reset fuel consumption timer.

4.4.24 Low Fuel (optional)

Indicates low fuel pressure in fuel tank.

Refill fuel and press “FUEL REFILLED” button to clear alarm.

4.4.25 DC SPD Fault

Indicates the DC Surge Protective Device has failed.

Replace DC Surge Protective Device.

4.4.26 Internal Battery LV

Indicates the internal start battery voltage is low <45V.

Charge battery and press “STOP” button to clear alarm.

4.4.27 Manual Over Time

Indicates the genset has been Running in Run-Manual-Mode for >1hr and may have been inadvertently left running, or has been off in Stop-Manual-Mode for >1hr and may have been inadvertently left off. In either of these cases the genset does not provide automatic backup.

Press “AUTO” button to enter Auto-Mode and clear alarm.

4.4.28 100H Maintain

Indicates 100hr routine maintenance is due.

Press “STOP” button to clear alarm.

4.4.29 500H Maintain

Indicates 500hr major routine maintenance is due.

Press “STOP” button to clear alarm.

4.4.30 50H Maintain

For genset without Oil Extender System, indicates 50hr routine of oil change is due.

Press “STOP” button to clear alarm.

4.4.31 Remote Disable

Indicates the genset has been disabled by a user provided short across Remote Disable terminals.

Provide open across Remote Disable terminals to clear alarm.

4.4.32 Oil Pump Fuse Fail

Indicates the Oil Pump Fuse has failed.

Replace fuse and press “STOP” button to clear alarm.

4.4.33 Overload

Indicates the genset has shut down due to load greater than the genset output capacity.

Clear overload condition and press “STOP” button to clear alarm.

4.5 Environment

4.5.1 Environmental Specifications

Item	Specification
Operating Temperature	-4°F ~ +115°F (-20°C~+46°C)
Storage Temperature	-40°F ~ +167°F (-40°C~+70°C)
Humidity	0~ 100% RH, condensing
Altitude	-20m – 4000m, derated above 2000m
Acoustic noise	< 76 dBA at 23ft (7m)

4.5.2 Safety Specification

Item	Specification
Operating Temperature	-4°F ~ +115°F (-20°C~+46°C)
Storage Temperature	-40°F ~ +167°F (-40°C~+70°C)
Humidity	0~ 100% RH, condensing
Altitude	-20m – 4000m, derated above 2000m
Acoustic noise	< 76 dBA at 23ft (7m)

5 Maintenance

5.1 Maintenance

To maintain proper functionality follow the maintenance schedule below.

Before performing any generator maintenance, always perform the following steps:

1. To set all generator's circuit breakers to it's OFF position.

2. To turn off the gas.

3. If passable, disconnect the wire-set connected with telecom power system.

5.1.1 Routine Maintenance

Regular maintenance will improve the performance and extend life of the generator. See any authorized dealer for service. It is better do them when site services.

Clean generator as desired.

- Use a damp cloth to wipe exterior surfaces clean.

- Use a soft, bristle brush to loosen caked on dirt, etc.

- Use a vacuum cleaner to pick up loose dirt and debris.

- Use low pressure air (not to exceed 25 psi) to blow away dirt. Inspect cooling air slots and openings on the generator. These openings must be kept clean and unobstructed.

- Checking/Adding Engine Oil

- Check the voltage of battery.

- Check the fuel is enough.

- If passable, manual run the generator 3 – 5 minutes to check the generator can run well.

5.1.2 Checking/Adding Engine Oil

1. Open roof to access dipstick and oil fill area.

2. Clean the oil fill area of any debris.

3. Remove the dipstick and wipe with a clean cloth.

4. Fully insert dipstick into oil fill.

5. Remove dipstick and check oil level. Verify oil is at Full mark on dipstick.

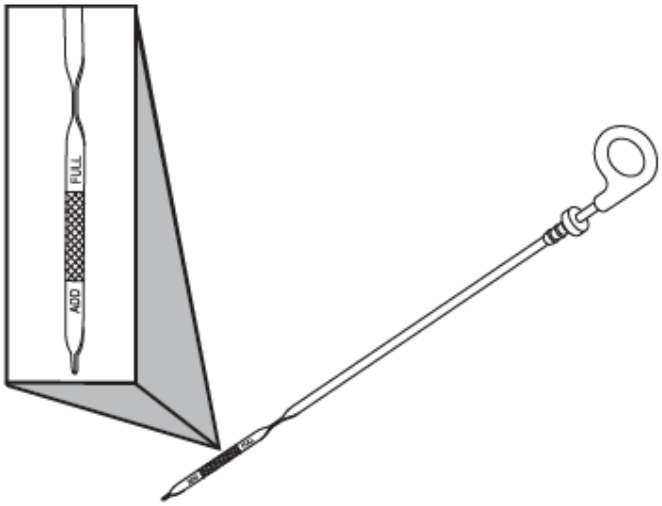

6. If needed, slowly pour recommended oil into oil fill opening. DO NOT overfill. After adding oil, wait one minute and recheck oil level

Note! Overfilling with oil could cause the engine to not start, or hard starting. DO NOT overfill. If over the FULL mark on dipstick, drain oil to reduce oil level to FULL mark on dipstick.

7. Replace oil dipstick.

8. Close roof and secure.

5.1.3 50 Run-hours Maintenance

For genset without Oil Extender System, every 50 run-hours complete the following:

- Check and reset valve lash clearance

- Checking/Adding Engine Oil

- Clean air filter

- Check muffler, gaskets, & muffler bolt torques

5.1.4 100 Run-hours Maintenance

Every 100 run-hours complete the following:

- Check and reset valve lash clearance

- Replace spark plugs (2)

- Clean or change air filter

- Check muffler, gaskets, & muffler bolt torques

5.1.5 500 Run-hours Maintenance

Every 500 run-hours complete the following:

- Change oil in engine and tank

- Replace oil filter

- Clean air cooling system including oil cooler fins.

5.1.6 Changing Engine Oil and Oil Filter

Caution! Avoid prolonged or repeated skin contact with used motor oil.

Caution! Used motor oil has been shown to cause skin cancer in certain laboratory animals.

Caution! Thoroughly wash exposed areas with soap and water.

Note! KEEP OUT OF REACH OF CHILDREN. DON'T POLLUTE. CONSERVE RESOURCES. RETURN USED OIL TO COLLECTION CENTERS.

Change the oil while the engine is still warm from running,

as follows:

1. Press STOPOFF button in control panel.

2. Turn off all breakers of generator.

3. Place oil drain hose into an approved container.

4. Remove brass fitting from end of drain hose and drain oil into an approved container.

5. When oil has drained, replace brass fitting on hose.

6. Place an approved container under oil filter.

7. Remove oil filter and dispose of properly.

8. Before installing a new oil filter, lightly lubricate the oil filter gasket with fresh, clean oil.

9. Install the oil filter by hand until the gasket contacts the oil filter adapter, then tighten the oil filter 1/2 to 3/4 turn.

10. Add oil.

11. Remove container from under oil filter and clean up any spilled oil.

12. Start and run engine. As engine warms up, check for oil leaks.

13. Stop engine, wait for oil to settle, check oil level and add if necessary.

5.1.7 Service Air Cleaner

To service the air cleaner, follow these steps:

1. Remove the cover of air cleaner.

2. Remove air filter.

3. To loosen debris, gently tap air cleaner on a hard surface. If air cleaner is excessively dirty, replace with a new air cleaner.

4. Install the air filter.

5. Install the cover and secure it.

Note! Placement parts must be the same and installed in the same position as the original parts.

5.1.8 Service Spark Plugs

Changing the spark plugs will help your engine to start easier and run better.

1. Clean area around spark plugs.

2. Remove and inspect spark plugs.

3. Check electrode gap with wire feeler gauge and reset spark plug gap to recommended gap if necessary (see Specifications).

4. Replace spark plugs if electrodes are pitted, burned or porcelain is cracked. Use the recommended replacement spark plugs. See Specifications.

5. Install spark plugs and tighten to 180 in/lbs (20 Nm).

5.2 Warranty

- The standard product guarantee is 12 months or 250 hours run-time from week code on the product. If you need more warranty, please contact with our sales.

- All user need to make sure follow the instructions in this manual to obtain manufacturer's product quality assurance service.

5.3 Recycling

At the end of the unit working life, the produce must not be disposed of as urban waste; it must be taken to a special local authority differentiated waste collection centre or to a dealer providing this service.

5.4 Spare Parts

In order to keep the best performance, we suggest replacing certificated spare parts. If you have any spare parts requirement, please contact us.

6 Troubleshooting

Condition 1 - No power

Abnormal Status: All LED in front panel are off.

1. Check the all breakers are on.

2. Check the BUS Voltage between 42 – 56Vdc.

3. In case of no BUS voltage, check the connecting with telecom power system.

4. Check the connecting with internal battery is good.

Condition 2 – Generator Start Fail

Abnormal Status: Generator crank but cannot start up

1. Check the meter on gas tank and gas tank has enough fuel.

2. Check the manual valve on gas tank is open.

Condition 3 – Engine speed is not stable

Abnormal Status: Generator is running but engine speed is not stable

1. Check the load is stable or not. The engine adjusts speed automatically according to difference load.

2. Check the oil is on scale of oil dipstick.

3. Check the air cleaner is clean.

4. Check the fuel pressure meter on gas tank.

5. Confirm spark plugs wires fully connected to spark plugs.

Condition 4 – DC SPD Fault

Abnormal Status: Generator shows Minor alarm and WEB page indicates DC SPD Fault.

1. Order a new Dc SPD from Delta or other vender.

2. Replace it.

Condition 5 – No Fuel Pre-Alarm

Abnormal Status: Generator shows No Fuel Pre-Alarm.

1. Check the meter on gas tank and gas tank has enough fuel or not.

2. Ask local vender to refill fuel.

3. Press FUEL REFILLED button to reset the genset Low Fuel Alarm Timer after refuelling.

7 Version & Glossary

7.1 Change History

Revision	Change contents	Edited by	Approved by	Issue Date
R00	Initial Version	Keith Hsiao	Pochin.Wang	05.15.2015

7.2 Glossary

List of abbreviations used in the manual:

Glossary	Description
A	Ampere
AC	Alternating Current
CB	Circuit Breaker
DC	Direct Current
DG	Diesel Generator
HV	High Voltage
HS	High Speed
HT	High Temperature
KWH	Kilo Watt Hour
LV	Low Voltage
LVP	Low Voltage Protection
LS	Low Speed
LSP	Low Speed Protection
LPG	Liquefied Petroleum Gas
MCB	Main Current Breaker
NG	Natural Gas

OSP	Over Speed Protection
R/W	Read and Write
SPD	Surge Protection Device
SoC	Status of Charge
VALA	Valve-Regulated Lead-Acid Battery
W/O	Without

Seller warrants this product, if used in accordance with all applicable instructions, to be free from original defects in material and workmanship within the warranty period. If the product has any failure problem within the warranty period, Seller repair or replace the product at its sole discretion according to the failure situation.

The warranty does not apply to normal wear or to damage resulting from improper installation, operation, usage, maintenance or irresistible force (i.e. war, fire, natural disaster, etc.), and this warranty also expressly excludes all incidental and consequential damages.

Maintenance service for a free is provided for any damage out of the warranty period. If any maintenance is required, please directly contact the supplier or Seller.

WARNING!

The individual user should take care to determine prior to use whether the environment and the load characteristic are suitable, adequate or safe for the installation and the usage of this product. The User Manual must be carefully followed. Seller makes no representation or warranty as to the suitability or fitness of this product for any specific application.

Our mission is to provide innovative, clean and energy-efficient solutions for a better tomorrow.